Super Natural

User's Guide

Version 9.2.5

September 2026

ADABAS & NATURAL

This document applies to Super Natural Version 9.2.5 and all subsequent releases.

Specifications contained herein are subject to change and these changes will be reported in subsequent release notes or new editions.

Copyright © 1985-2026 Software GmbH, Darmstadt, Germany and/or its subsidiaries and/or its affiliates and/or their licensors.

The name Software AG and all Software GmbH product names are either trademarks or registered trademarks of Software GmbH and/or its subsidiaries and/or its affiliates and/or their licensors. Other company and product names mentioned herein may be trademarks of their respective owners.

Detailed information on trademarks and patents owned by Software GmbH and/or its subsidiaries is located at https://softwareag.com/licenses.

Use of this software is subject to adherence to Software GmbH's licensing conditions and terms. These terms are part of the product documentation, located at https://softwareag.com/licenses and/or in the root installation directory of the licensed product(s).

This software may include portions of third-party products. For third-party copyright notices, license terms, additional rights or restrictions, please refer to "License Texts, Copyright Notices and Disclaimers of Third-Party Products". For certain specific third-party license restrictions, please refer to section E of the Legal Notices available under "License Terms and Conditions for Use of Software GmbH Products / Copyright and Trademark Notices of Software GmbH Products". These documents are part of the product documentation, located at https://softwareag.com/licenses and/or in the root installation directory of the licensed product(s).

Use, reproduction, transfer, publication or disclosure is prohibited except as specifically provided for in your License Agreement with Software GmbH.

Document ID: NSN-USERGUIDE-925-20260929

Table of Contents

Preface ix
1 About this Documentation 1
Document Conventions 2
Online Information and Support 2
Data Protection 3
2 Introducing Super Natural 5
What is Super Natural? 6
Reporting Transactions 6
Prototypes and Exits 10
User Defaults 11
Application Connections 12
Maintaining Data 13
3 Using Super Natural 15
Screen and Window Structure 16
Selecting from Screens and Windows 22
Paging 23
Commands 24
ENTER Key 25
PF Keys 25
Asterisk List Function 28
Checklist Function 29
Navigation 32
Online Help 34
Libraries 35
Notepad Function 39
Technical Information Function 42
4 Starting Up 43
Starting a Super Natural Session 44
How is Super Natural Organized? 44
Choosing an Object Type or Function 45
Choosing an Object 47
Working with an Object 50
5 Using Reporting Transactions 51
What are Reporting Transactions? 52
Listing Transactions 53
Adding Transactions 53
Keeping Transactions 58
Saving Transactions 58
Running Transactions 59
Reports Which are Too Wide 59
Modifying Transactions 61
Executing Transactions 62
Copying Transactions 62

Deleting Transactions 64
Information (Info) Function 65
Commands Available From Within a Transaction 67
6 Working with the Worksheet 71
What is the Worksheet? 72
Field Reference Column 74
Database Reference Column 74
Field Name Column 76
Sequence Column 81
Sort/Control Column 87
Option Column 90
Function Column 90
Field Definition Column 97
Information (Info) Column 100
Delete Column 101
Commands Available from the Worksheet 102
7 Using a Database Structure 103
What is a Database? 104
Accessing Data UsingSuper Natural 105
8 Defining Files 107
What are Files? 108
Using More Than One File - The INCLUDE Command 109
What is File Linking? 117
What is File Lookup? 119
Superfiles 123
Extended File Descriptions and File Comments 124
9 Defining Fields 125
What are Fields? 126
Field Types 127
Field Formats 130
Constants 133
Descriptors 135
Extended Field Descriptions 136
10 Using Editors 137
What are the Super Natural Editors? 138
Editor Commands 139
Editor Help System 143
Operators Available in the Full-Screen Editors 144
Selection Editor 145
Calculation Editor 157
Logical Conditions Editor 169
SQL SELECT Editor 173
PC File Description Editor 179
Work File Description Editor 181
User File Description Editor 183

Arrays ... 183
11 Working with Natural Report Manager ... 187
What is Natural Report Manager? ... 188
When is a Default Layout Generated? ... 189
Invoking Natural Report Manager ... 190
Issuing Commands ... 190
Navigating Within Natural Report Manager ... 191
Natural Report Manager PF Keys ... 193
Layout Overview Screen ... 194
Layout Editor Screens ... 196
Layout Editor Editor Area ... 203
Display Layout Element Screen ... 213
Layout Field List Screen ... 214
Extended Field Editing Window ... 215
Array Editing Window ... 218
Layout Settings ... 219
Testing Layouts ... 221
Elements ... 221
12 Working with Prototype Programs ... 225
What Are Prototype Programs? ... 226
Listing Prototype Programs ... 227
Generating Prototype Programs ... 227
Saving Prototype Programs ... 227
Running Prototype Programs ... 228
Leaving the Natural Program Editor ... 228
Modifying Prototype Programs ... 228
Copying Prototype Programs ... 229
Deleting Prototype Programs ... 230
Example Prototype Program ... 230
13 Using the Super Natural RPC Service ... 233
Introduction ... 234
Hints and Limitations ... 235
Dynamic Input Fields ... 236
Generate an RPC Service ... 236
14 Using User Exit Programs ... 241
What are User Exit Programs? ... 242
Activating User Exit Programs ... 243
Deactivating User Exit Programs ... 245
Locking User Exit Locations ... 245
15 Adjusting a User Profile ... 247
What is a User Profile? ... 248
Modifying Your User Profile ... 250
Screen Colors ... 252
Screen Defaults ... 252
Time and Date Formats ... 253

PF Key Settings 254
Language Code and Checklist 255
Transaction Options 255
Environment Options 255
Output Options 257
Processing Options 258
Transaction Modes 260
16 Defining Transaction Modes for Reporting 261
What are Reporting Modes? 262
Modifying Your Reporting Modes 264
Data Selection 266
Data Change 271
Report Type 273
Report Level 279
Destination 280
Run Mode 283
17 Defining Transaction Modes for Data Maintenance 285
What are Maintenance Modes? 286
Modifying Your Maintenance Mode Defaults 287
Transaction Type 289
Logging 289
Logging Destination 290
18 Working with Application Programs 291
What are Application Programs? 292
Listing Application Programs 292
Adding Application Programs 293
Executing Application Programs 297
Deleting Application Programs 297
19 Working with User Files 299
What are User Files? 300
Listing User Files 300
Adding User Files 302
Information Function 306
Deleting User Files 307
Retrieving User Files 309
Creating User Files Using Destination USER FILE 309
20 Working with Data Maintenance Transactions 315
What are Data Maintenance Transactions? 316
Listing Transactions 316
Adding Data Maintenance Transactions 317
Adding Data 320
Updating Data 324
Deleting Data 327
21 Command List 329
A 330

B 332
C 334
D 335
E 336
F 337
G 338
H 338
I 339
J 339
K 339
L 340
M 340
N 341
O 342
P 342
Q 343
R 343
S 344
T 347
U 348
V 348
W 348
X 349
Y 349
Z 349
Special Characters 349
22 System Variables 351
*APPLIC-ID 352
*APPLIC-NAME 353
*DAT Variables 353
*DEVICE 354
*GROUP 354
*HARDCOPY 354
*INIT-ID 355
*INIT-USER 355
*LANGUAGE 355
*LIBRARY-ID 357
*OPSYS 357
*PAGE-NUMBER 357
*PROGRAM 357
*TIM Variables 357
*TPSYS 358
*USER 358
*USER-NAME 358
23 Edit Masks 359

What are Edit Masks? 360

Preface

This documentation introduces you to the usage of Super Natural. The documentation is organized in the following parts:

Introducing Super Natural
Using Super Natural
Starting Up
Using Reporting Transactions
Working with the Worksheet
Using a Database Structure
Defining Files
Defining Fields
Using Editors
Working with Natural Report Manager
Working with Prototype Programs
Using the Super Natural RPC Service
Using User Exit Programs
Adjusting a User Profile
Defining Transaction Modes for Reporting
Defining Transaction Modes for Data Maintenance
Working with Application Programs
Working with User Files
Working with Data Maintenance Transactions
Command List
System Variables
Edit Masks

The following diagram explains a syntax diagram used later in his documentation which uses nearly all the syntax conventions.

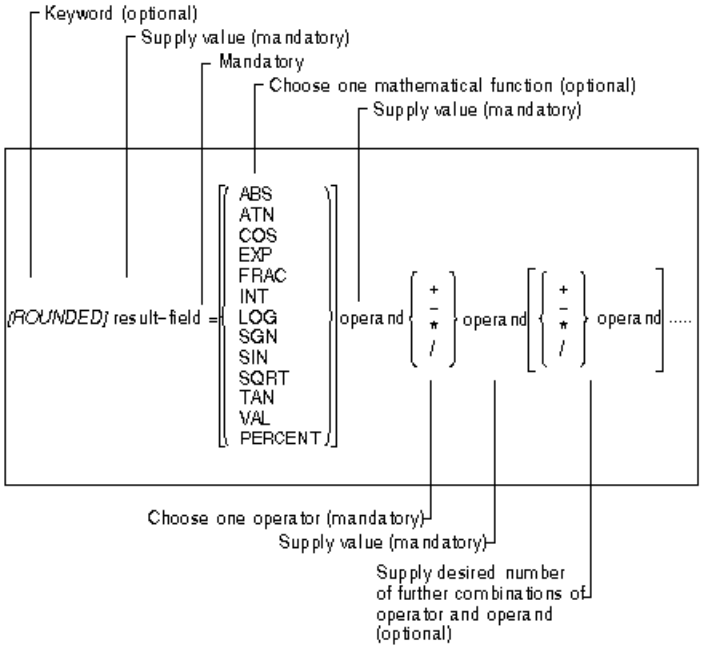
Keyword (optional)
Supply value (mandatory)
Mandatory
Choose one mathematical function (optional)
Supply value (mandatory)
[ROUNDED] result-field =
ABS
ATN
COS
EXP
FRAC
INT
LOG
SGN
SIN
SQRT
TAN
VAL
PERCENT
operand
+
-
*
/
operand
+
-
*
/
operand .....
Choose one operator (mandatory)
Supply value (mandatory)
Supply desired number of further combinations of operator and operand (optional)

1 About this Documentation

- Document Conventions 2
- Online Information and Support 2
- Data Protection 3

Document Conventions

Convention	Description
Bold	Identifies elements on a screen.
`Monospace font`	Identifies service names and locations in the format *`folder.subfolder.service`*, APIs, Java classes, methods, properties.
`Italic`	Identifies: Variables for which you must supply values specific to your own situation or environment. New terms the first time they occur in the text. References to other documentation sources.
`Monospace font`	Identifies: Text you must type in. Messages displayed by the system. Program code.
{ }	Indicates a set of choices from which you must choose one. Type only the information inside the curly braces. Do not type the { } symbols.
|	Separates two mutually exclusive choices in a syntax line. Type one of these choices. Do not type the | symbol.
[ ]	Indicates one or more options. Type only the information inside the square brackets. Do not type the [ ] symbols.
...	Indicates that you can type multiple options of the same type. Type only the information. Do not type the ellipsis (...).

Online Information and Support

Product Documentation

You can find the product documentation on our documentation website at **https://documentation.softwareag.com**.

Product Training

You can find helpful product training material on our Learning Portal at **https://learn.softwareag.com**.

Tech Community

You can collaborate with Software GmbH experts on our Tech Community website at **https://tech-community.softwareag.com**. From here you can, for example:

- Browse through our vast knowledge base.
- Ask questions and find answers in our discussion forums.
- Get the latest Software GmbH news and announcements.
- Explore our communities.
- Go to our public GitHub and Docker repositories at **https://github.com/softwareag** and **https://hub.docker.com/publishers/softwareag** and discover additional Software GmbH resources.

Product Support

Support for Software GmbH products is provided to licensed customers via our Empower Portal at **https://empower.softwareag.com**. Many services on this portal require that you have an account. If you do not yet have one, you can request it at **https://empower.softwareag.com/register**. Once you have an account, you can, for example:

- Download products, updates and fixes.
- Search the Knowledge Center for technical information and tips.
- Subscribe to early warnings and critical alerts.
- Open and update support incidents.
- Add product feature requests.

Data Protection

Software AG products provide functionality with respect to processing of personal data according to the EU General Data Protection Regulation (GDPR). Where applicable, appropriate steps are documented in the respective administration documentation.

2 Introducing Super Natural

- What is Super Natural? 6
- Reporting Transactions 6
- Prototypes and Exits 10
- User Defaults 11
- Application Connections 12
- Maintaining Data 13

This chapter gives an overview of Super Natural's capabilities.

This section covers the following topics:

- **What is Super Natural?**
- **Reporting Transactions**
- **Prototypes and Exits**
- **User Defaults**
- **Application Connections**
- **Maintaining Data**

What is Super Natural?

Super Natural is a product for extracting and processing data from mainframe or PC files. Using Super Natural, it is easy to perform both simple and complex tasks. The main task of Super Natural is to extract data from a database according to the selection criteria you define and to present it in the form of reports. To do this you need no detailed knowledge of programming so Super Natural is also suitable for occasional users. You can process the report data you obtain either within Super Natural or externally. For example, you can send the report data to a PC, or to an office information system.

Reporting Transactions

Reporting transactions are the most important part of Super Natural. Super Natural's main task is to obtain data from a file and present it in the form of a report. Super Natural can access data held in one or more database files, in PC files and work files. Reporting transactions provide you with the framework necessary to tell Super Natural which data you want.

Worksheet

The Worksheet provides the basis for creating reports. You use the Worksheet as follows:

- To select the fields you want to use from the file or files you have chosen
- To determine how the data is displayed in the report.

Different versions of the Worksheet appear according to your user default settings and the transaction mode you are using. The following version of the Worksheet appears for a reporting transaction with the default settings supplied with Super Natural:

```
14:51                      ***** Super Natural *****                18.Dec.1998
SN3011                           - Worksheet -                          Friday

Ref DB    Field Name                          Seq   S/C  Func Def  Info Del
BI        ________________________________    ___   ___   __   __   __   __
BJ        ________________________________    ___   ___   __   __   __   __
BK        ________________________________    ___   ___   __   __   __   __
BL        ________________________________    ___   ___   __   __   __   __
BM        ________________________________    ___   ___   __   __   __   __
BN        ________________________________    ___   ___   __   __   __   __
BO        ________________________________    ___   ___   __   __   __   __
BP        ________________________________    ___   ___   __   __   __   __
BQ        ________________________________    ___   ___   __   __   __   __
BR        ________________________________    ___   ___   __   __   __   __
BS        ________________________________    ___   ___   __   __   __   __
BT        ________________________________    ___   ___   __   __   __   __
BU        ________________________________    ___   ___   __   __   __   __
BV        ________________________________    ___   ___   __   __   __   __


Enter "*" in Fieldname column to select fields or enter NEXT
Command ===>
Enter-PF1---PF2---PF3---PF4---PF5---PF6---PF7---PF8---PF9---PF10--PF11--PF12---
      Help  Next  Exit  Incl        Flip  -     +           Sel   Run   Canc
```

Editors

Super Natural offers a variety of editors for use when creating transactions. All the editors function in the same way apart from the Layout Editor.

Full-Screen Editors

- **Selection Editor**
  Used for specifying selection criteria. Selection criteria tell Super Natural which records it should read in the database.
- **Calculation Editor**
  Used for specifying calculations which should take place when the transaction is run.
- **Logical Conditions Editor**
  Used for editing logical condition statements comprising IF, THEN, and ELSE clauses.
- **SQL SELECT Editor**
  Used for specifying selection criteria using SQL-SELECT statements.

The following is an example of a full-screen editor:

```
14:53                      ***** Super Natural *****                18.Dec.1998
SNZUL-S                       - Selection Editor -                       Friday


      1  < NAME = 'MEIER'                                              >    1
      2  <                                                             >    2
      3  <                                                             >    3
      4  <                                                             >    4
      5  <                                                             >    5
      6  <                                                             >    6
      7  <                                                             >    7
      8  <                                                             >    8
      9  <                                                             >    9
     10  <                                                             >   10
     11  <                                                             >   11
     12  <                                                             >   12
     13  <                                                             >   13
     14  <                                                             >   14
     15  <                                                             >   15

Define selection lines or use CONTINUE
Command ===>
Enter-PF1---PF2---PF3---PF4---PF5---PF6---PF7---PF8---PF9---PF10--PF11--PF12---
      Help  Next  Exit  Field Check Flip  -     +           Cont  Run   Canc
```

File Description Editors

- **PC File Description Editor**
  Used for defining file layout if you are using data from a PC file.
- **Work File Description Editor**
  Used for defining file layout if you are using data from a work file.
- **User File Description Editor**
  Used for defining user file layouts.

The following is an example of a file description editor:

```
11:41                        ***** Super Natural *****              04.Jan.1998
SNZUL-UF                - User File Description Editor -                Monday

          Fieldname                              Format  Length  Dec.Places  Key
      1 <                                   >
      2 <                                   >
      3 <                                   >
      4 <                                   >
      5 <                                   >
      6 <                                   >
      7 <                                   >
      8 <                                   >
      9 <                                   >
     10 <                                   >
     11 <                                   >
     12 <                                   >
     13 <                                   >
     14 <                                   >
     15 <                                   >


Command ===>
Enter-PF1---PF2---PF3---PF4---PF5---PF6---PF7---PF8---PF9---PF10--PF11--PF12---
      Help        Exit              Flip  -     +                       Canc
```

Layout Editor

- **Layout Editor**
  Part of the tool Natural Report Manager used for editing the layout of Super Natural reports during creation and modification. The Layout Editor is similar to the Natural map editor.

```
14:55                    *** NATURAL REPORT MANAGER ***              18.Dec.1998
NRMEDIT                         - Layout Editor -                        Friday
                                                                 More:       >
  Transaction Fields                      Delimiter Class    Attrib.  Color
1 PERSON-ID                       N8.0    Blank     Text     Default
2 BIRTH-DATE                      N8.0    _         Text     Intensif
3 SEX                             A1      (         Output   Default
. NAME                            *G1     )         Output   Intensif
4 SURNAME                         A20
5 FIRST-NAME-1                    A20     Escape Char. = ,   Header Char. = &
All   ---010---+----+----+---030-- ( Title ) +---050---+----+----+---070--- Typ
(XXXXXXXX _SSSSSSSSSSSSSSSSSSSSSSSSSSSSSSSSSSSSSSSSSSSSSSSSSSSSSSSSSSSSSSS(XXX Ttl
(XXXXXXXX _SSSSSSSSSSSSSSSSSSSSSSSSSSSSSSSSSSSSSSSSSSSSSSSSSSSSSSSSSSSSSSS(999 Ttl
          _SSSSSSSSSSSSSSSSSSSSSSSSSSSSSSSSSSSSSSSSSSSSSSSSSSSSSSSSSSSSSSSS     Ttl
                                                                                ___
                                                                                ___
                                                                                ___
                                                                                ___
                                                                                ___
                                                                                ___
You are on the first page.
Command ===>
Enter-PF1---PF2---PF3---PF4---PF5---PF6---PF7---PF8---PF9---PF10--PF11--PF12---
      Help  Set   Exit  Field Edit  Flip  -     +     Tech  <     >     Canc
```

Prototypes and Exits

Prototype Programs

Prototype programs are basic program frameworks for reporting or data maintenance transactions. The program framework for a transaction is generated in Natural reporting mode. A Natural programmer can use the program framework as a prototype for further development. Because it doesn't contain any code specific to Super Natural, a prototype program can be used like any other Natural program.

User Exit Programs

User exit programs are usually written by the Super Natural administrator and can be used in the following ways:

- To carry out repetitive or complex tasks
- To carry out tasks which are repeated every time a particular file is accessed
- To perform many functions additional to the normal capabilities of Super Natural.

User exit programs are stored outside Super Natural but can be invoked and executed when a Super Natural transaction is run. A user exit program can be a Natural object (program, sub-program, sub-routine or map) or a Natural-callable program stored outside Natural. Super Natural enables the end user to invoke user exit programs from selected locations within a transaction.

User Defaults

User defaults are set by the Super Natural administrator. You can change your user environment to suit your individual needs by modifying your user profile and/or your transaction modes.

User Profile

Your user profile influences the appearance of screens, PF key settings, screen colors, how the date and time are displayed and many technical details concerning the environment, output and processing of transactions.

Transaction Modes

Transaction modes control the basic conditions for reporting and data maintenance transactions.

Reporting Modes

There are six groups of modes for reporting transactions (reporting modes) which influence the following areas:

- Data Selection - how you select data. You can select data as follows:
- Using the Selection Editor
- Using the SQL SELECT Editor.
- Using the Work File Description Editor (for data from a work file)
- Using the PC File Description Editor (for data from a PC file)
- Data Change - allows you to edit each record separately when a report runs before sending it to a user file or a printer
- Report Type - how the report is to be displayed, for example as a list, graph or table.
- Report Level - allows you to obtain the data produced by standard functions at control breaks only
- Destination - where the data is directed (see diagram on following page)
- Run Mode - allows you to execute transactions online or in batch mode.

The following diagram shows which report destinations are available.

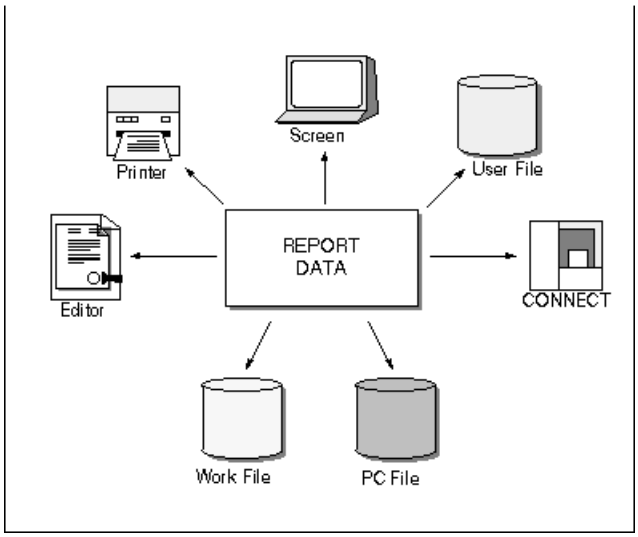

Data Maintenance Modes

There are three groups of modes for data maintenance transactions (maintenance modes) which influence the following areas:

- Transaction Type - determines whether you add records, delete records, update records singly or update multiple records
- Logging - determines whether a report is written containing the data that has been processed
- Logging Destination - where the log is directed.

Application Connections

You can access other applications installed at your site directly from Super Natural:

Application Programs

Using application programs you can access any application installed at your site directly from Super Natural.

Maintaining Data

Data maintenance is the term used for creating user files and modifying, deleting, adding and copying data.

User Files

You can use Super Natural to create your own files which are known as user files. There are two ways to create a user file:

- Copy an existing file
- Create an empty file

Data Maintenance Transactions

You can use data maintenance transactions to add, update and delete records in user files.

The Super Natural administrator can restrict your access to files created by other users.

3 Using Super Natural

- Screen and Window Structure 16
- Selecting from Screens and Windows 22
- Paging 23
- Commands 24
- ENTER Key 25
- PF Keys 25
- Asterisk List Function 28
- Checklist Function 29
- Navigation 32
- Online Help 34
- Libraries 35
- Notepad Function 39
- Technical Information Function 42

This section describes how to start using Super Natural.

This section covers the following topics:

- **Screen and Window Structure**
- **Selecting from Screens and Windows**
- **Paging**
- **Commands**
- **ENTER () Key**
- **Keys**
- **Asterisk (*) List Function**
- **Checklist Function**
- **Navigation**
- **Online Help**
- **Libraries**
- **Notepad Function**
- **Technical Information Function**

Screen and Window Structure

A system of screens and windows guides you through Super Natural. From these screens and windows you can select object types and functions.

This documentation describes and shows Super Natural screens and windows as they are distributed.

Some of the screens and windows shown in this documentation may look different from those you see on your terminal screen. If this is the case, your Super Natural administrator has changed your user profile. For further information on user profiles, see ***User Profile*** or ask your administrator.

The following are a few examples of differences due to user profile modifications:

- The Menu is not the first screen to appear when you log on to Super Natural
- Screen layout is different
- Functions or options shown in the documentation are missing.

Screens

The word screen is used in this documentation for a page which a program displays on your terminal screen. Screens display information and also allow you to make entries which are then processed by Super Natural. Screens provide the basis for complex functions.

All Super Natural screens are similarly structured and can be divided into the three sections: Header, Work Area and Command Area.

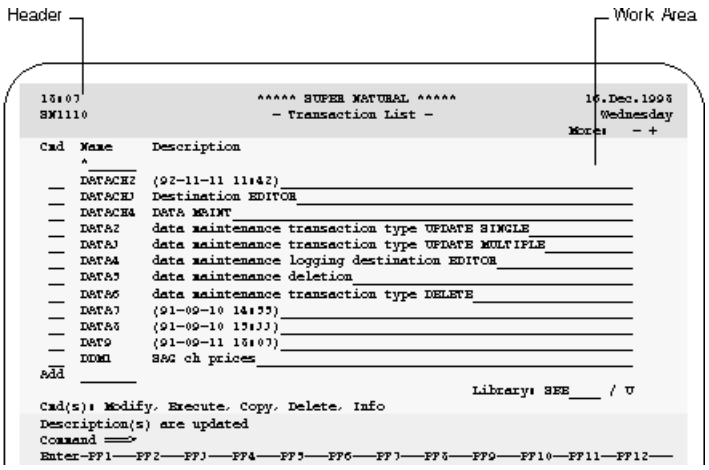

Header

The first section of each Super Natural screen is the header. By default, the first line shows the time on the left, the product name in the center and part of the date on the right. The second line shows the title of the screen and, the program name and the rest of the date. The program name is displayed for administrative purposes only. You can change the position and contents of the items in the first two header lines. For further information, see ***User Profile***. The third line is an information line which displays paging information when relevant.

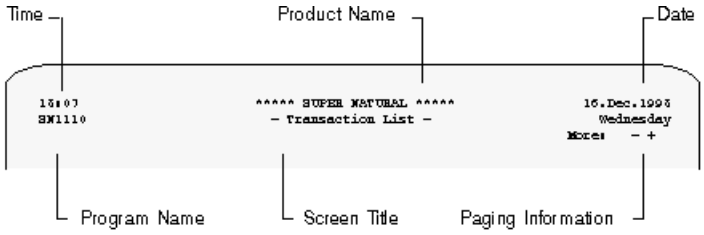

Work Area

The second section is individual to each screen. The work area is where you interact with Super Natural by making entries and receiving results. You use the work area to determine how data is processed. The following figure shows a sample work area:

```
Cmd  Name     Description
     *______
 __  DATACH2  (92-11-11 11:42)_____________________________________________
 __  DATACH3  Destination EDITOR___________________________________________
 __  DATACH4  DATA MAINT___________________________________________________
 __  DATA2    data maintenance transaction type UPDATE SINGLE______________
 __  DATA3    data maintenance transaction type UPDATE MULTIPLE____________
 __  DATA4    data maintenance logging destination EDITOR_________________
 __  DATA5    data maintenance deletion___________________________________
 __  DATA6    data maintenance transaction type DELETE____________________
 __  DATA7    (91-09-10 14:55)____________________________________________
 __  DATA8    (91-09-10 15:33)____________________________________________
 __  DAT9     (91-09-11 18:07)____________________________________________
 __  DDM1     SAG ch prices_______________________________________________
Add  _______
                                                      Library: SBE____ / U
Cmd(s): Modify, Execute, Copy, Delete, Info
```

Command Area

The third section of each Super Natural screen is the command area. The command area contains the message line, the command line and the PF key lines. You can change the position of the message and PF key lines; for further information, see ***User Profile***.

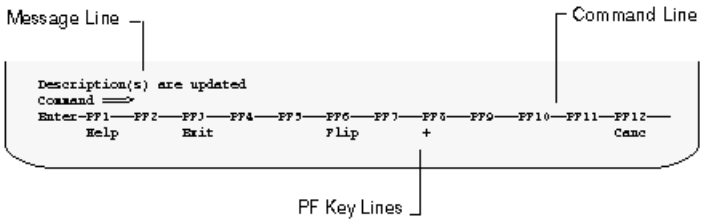

Message Line

The Super Natural message line displays Super Natural system messages. There are several types of system messages:

- Acknowledgements tell you when a function has been successfully or unsuccessfully performed
- Prompts tell you what to do next.

- Error messages tell you if you have made a mistake. Error messages are identified by a four-figure number before the text.

Command Line

You can enter commands and command abbreviations in the Super Natural command line.

For further information on commands, see ***Commands***.

PF Key Lines

The PF key lines show which PF keys (program function keys) are allocated to which functions. The PF key lines only show the functions available from the screen currently displayed. PF keys are described later in this section.

You can display the PF key lines in ISA format, SAA format or as a cursor-sensitive bar by changing your user profile. For further information, see ***PF Key Settings*** in *User Profile*.

The ENTER key is also listed in the PF key lines and is described later in this section.

Windows

If you think of a screen as a piece of paper, a window is like a smaller piece of paper placed on top of it. Windows can also appear placed on top of each other. Windows are always relevant to the screen underneath them.

The following diagram shows the Application List screen with the Add Application window:

```
11:34                      ***** Super Natural *****                11.Jan.1993
SN1130                        - Application List -                       Monday

Cmd  Name     Descriptio +------------------Add Application-------------------+
     *______              !                                                     !
 __  APPL1    __________ ! Application ID .... _______                        !
 __  APPL2    __________ ! Description ....... ________________________________ !
 __           __________ !                    ________________________________ !
 __           __________ ! Application name .. ________                       !
 __           __________ ! Start-up program .. MENU____                       !
 __           __________ !                                                    !
 __           __________ ! More parameters ... N (Y/N)                        !
 __           __________ ! More commands ..... N (Y/N)                        !
 __           __________ !                                                    !
 __           __________ +-----------------------------------------------------+
```

The following diagram shows the Application List screen with a series of 3 open windows:

```
16:41                      ***** Super Natural *****                06.Jan.1993
SN1130                        - Application List -                    Wednesday

Cmd  Name     Descriptio +--------------- +- +------Application Command-------+
     APPL3__             !                !  !                                 !
 __           __________ ! Application ID !  ! Additional command .. ________ !
 __           __________ ! Description .. !  !                                 !
 __           __________ !                !  ! More parameters ..... N        !
 __           __________ ! Application na !  ! More commands ....... N        !
 __           __________ ! Start-up progr !  !                                 !
 __           __________ !                !  +---------------------------------+
 __           __________ ! More parameter !                                    !
 __           __________ ! More commands  +----------------------------------+
 __           __________ !                                                    !
 __           __________ +----------------------------------------------------+
```

Windows offer you information or a list of options or functions to choose from. Windows do not contain the Super Natural header or command area but use the command area of the underlying screen.

There are five types of windows:

- Dialog windows
- Selection list windows
- Message windows
- Confirmation windows
- Help windows

Dialog Windows

Dialog windows offer functions additional to the underlying screen. The Define Field Output window is a typical dialog window:

```
11:54                      ***** Super Natural *****                11.Jan.1993
SN3011                           - Worksheet -                          Monday

Ref DB    Field Na +-------------------Define Field Output--------------------+
AA  1K    YACHT-ID ! Field: YACHT-ID                                          !
AB  1K    YACHT-NA !                                                          !
AC  1     YACHT-BR ! Format/Length ....... N8                                 !
AD  1K    ID-CH-BA ! Numeric sign ........ _ (Y/N)                            !
AE  1K    ID-S-OWN ! Output length ....... 8__                                !
AF  1K    DID-DESC !        dec. places .. _                                  !
AG  1K    YACHT-TY ! Heading ............ ______________________________     !
AH  1     LENGTH . !                      ______________________________     !
AI  1     WIDTH .. !                      ______________________________     !
AJ  1     DRAFT .. ! Edit mask                                                !
AK  1     SAIL-SUR !   ___________________________________________________   !
AL  1     MOTOR .. ! Suppress identical values .. _ (Y/N)                     !
AM  1     HEAD-ROO ! Print zero values .......... _ (Y/N)                     !
AN  1     BUNKS .. ! Occurrences (1)  ___ : ___  (2)  ___ : ___               !
                   !                                                          !
                   +----------------------------------------------------------+
```

Selection List Windows

Selection list windows show lists of objects or options which you can select or on which you can perform commands. The Field Selection List window is a typical selection list window:

```
11:57                      ***** Super Natural *****                11.Jan.1993
SN3011                           - Worksheet -                          Monday

Ref DB    Field Name     +----------------Field Selection List----------------+
AA  1K    YACHT-ID ..... !     Field Name                        Format  Info !
AB  1K    YACHT-NAME ... !  _  YACHT-BRANCH                      A1      __   !
AD  1K    ID-CH-BASE ... !  _  ID-S-OWNER                        N8      __   !
BB  2K    ID-YACHT ..... !  _  DID-DESCRIPTION                   A8      __   !
BV        _____________  !  _  YACHT-TYPE                       A30     __   !
BW        _____________  !  _  LENGTH                           P3.2    __   !
BX        *____________  !  _  WIDTH                            P3.2    __   !
BY        _____________  !  _  DRAFT                            P3.2    __   !
BZ        _____________  !  _  SAIL-SURFACE                     P3      __   !
CA        _____________  !  _  MOTOR                            P3      __   !
CB        _____________  !  _  HEAD-ROOM                        P3.2    __   !
CC        _____________  !  _  BUNKS                            P3      __   !
CD        _____________  !  _  YACHT-NAME-PH                    A30     __   !
CE        _____________  !  _  YACHT-BRANCH-SP                  A9      __   !
                         !                                                   !
                         +More:   +-----------------------------------------+
```

Message Windows

Message windows display Super Natural system messages. There are several types of system messages:

- Acknowledgements tell you when a function has been successfully or unsuccessfully performed
- Prompts tell you what to do next
- Error messages tell you if an error has occurred
- Warnings

Confirmation Windows

Confirmation windows give you a chance to cancel functions which have important consequences such as deleting an object. Confirmation windows can also offer you alternatives to the current function.

Help Windows

For information on help windows, see ***Online Help*** in *Using Super Natural*.

Selecting from Screens and Windows

There are two ways to select items from a screen or window:

To select an item from a screen or window

- Type any non-blank character in the selection column next to the item and press Enter.

  Or:

  Position the cursor in the selection column next to the item and press Enter.

  Once you have marked an item or items with a non-blank character in the selection column, the cursor position is ignored.

Paging

When you are looking at object list screens, reports, list windows or at a series of windows, you need to know where you are in the list or series and to look at the pages before or after.

Paging Information

The third line of the Super Natural header gives you paging information for screens containing lists or information which is wider or longer than the screen (for example, reports and layouts). No paging information is shown if only the current screen of information is available. In windows, the paging information is displayed in the bottom left-hand corner of the window frame. Paging information is indicated as follows:

Paging Information	Description
More: +	Page(s) after
More: -+	Page(s) before and after
More: -	Last page
More: >	Page(s) available to the right
More: <	Page(s) available to the left

Be careful not to confuse the plus sign (+) which forms the corner of each window frame on some terminals with the paging information.

Paging Commands

The following commands are available for paging in screens and windows:

Command	Description
+	One page forwards
+-+	Go to last page
-	One page backwards
--	Go to first page
>	Page to the right
<	Page to the left

Note: In the Object List Screens, you can also position to a name, letter or character in the list using the `Start Value` field. For further information, see ***Object List Screens*** in *Starting Up*.

Commands

Commands are instructions which tell Super Natural what to do with an object, invoke a screen or start a function.

If you enter an incorrect command or a command which is not available at the current location, the Command List window appears.

For a complete list of the commands available in Super Natural, see *Command List*.

Command Sequence

Super Natural commands are structured as follows:

```
command-keyword object-type object-name
```

Abbreviating Commands

You can abbreviate commands as long as the commands remain unique. For example the command `DELETE TRANSACTION TEST` can be abbreviated as follows in the Transaction List screen:

```
D TR TEST
```

On a screen where the commands `LOCK` and `LOGICS` are both available, you cannot use the abbreviation `L`. The shortest abbreviations possible are as follows:

```
LOC
```

```
LOG
```

Issuing Commands

There are three ways to issue commands:

To issue a command

- Enter the command in the command line.

  Or:

  Enter the command abbreviation in the command column next to the object it is to act on.

  When a list of objects is displayed, the commands you can use with the object type are listed in the line above the message line (legend).

  Or:

Press the PF key allocated to the command.

You can often choose which way you want to issue a command.

Note: When a window is displayed, you can only issue the commands relevant to the window. When an object name is the same as a command keyword, in direct commands the object name must be preceded by the data-delimiter character. The default data-delimiter character is #.
Example: DELETE #JCL

Listing Commands

To list the commands available from the current screen

- Enter an asterisk (*) in the command line.

  Only the commands which you can currently use are displayed. For example, when you enter an asterisk (*) in the command line of Natural Report Manager, the command list you get is different from the list you get when you enter an asterisk (*) in the command line of the Menu.

ENTER Key

The ENTER key is listed in the PF key line. Whenever you type information in a command line or input field, you must submit it for processing by pressing the ENTER key.

If you have specified or selected functions, pressing Enter executes the functions you have selected and displays the next screen or window.

PF Keys

Commands can be allocated to PF keys (program function keys) so that pressing a PF key executes a particular function. The PF key allocations which are available for a particular screen are listed in the PF key lines.

For further information on the PF key lines, see ***Screens*** in *UsingSuper Natural*.

To issue a command using a PF key

- Press the PF key.

  You do not need to press Enter.

You can change the format and position of the PF key line by modifying your user profile. For further information on modifying your user profile, see ***User Profile***.

Default PF Key Allocation

Super Natural provides the following default PF key allocations in accordance with our ISA (Integrated open Software Architecture) standards. The PF keys execute the same functions on every screen where they are available.

Help Function

You can invoke a help window for every screen in Super Natural by pressing PF1. For further information on the Super Natural help system, see ***Online Help*** in *Using Super Natural*.

Exit Function

The `Exit` function ends the function you are performing and saves your modifications.

If you leave a transaction using the `EXIT` command which hasn't yet been saved, the Exit Handling window gives you a choice of the following:

- Save and exit
- Keep and exit
- Exit without keeping or saving
- Resume the current function

Flip Function

There are twenty-four PF keys, but you can only see twelve PF keys in the PF key line.

If you use the `Flip` function, the other twelve PF keys are displayed.

For example, if the keys PF1 to PF12 are displayed, the `Flip` function displays the keys PF12 to PF24.

Whichever twelve keys are displayed, you can still use any of the other twelve keys which have a function allocated to them.

The `Flip` function is not relevant for SAA PF key display format.

Page Backwards Function

If you use the `Page Backwards (-)` function, the previous screen or window of information is displayed.

Page Forwards Function

If you use the `Page Forwards (+)` function, the next screen or window of information is displayed.

Shift Left Function

If you have more columns in a report than you can see at one time, the `Shift Left (<)` function allows you to look at data to the left of your present screen contents.

Shift Right Function

If you have more columns in a report than you can see at one time, the `Shift Right (>)` function allows you to look at data to the right of your present screen contents.

Cancel Function

The `CANCEL` function interrupts the current function without saving. If a window is displayed, the `CANCEL` command closes it and if a screen is displayed, the `CANCEL` command invokes the previous screen.

Note: The Confirmation window does not appear and entries made since you last saved or pressed Enter are cancelled!

Menu Function

The `Menu` function interrupts the current function without saving and takes you back to the Menu from any point inSuper Natural.

Note: The Confirmation window does not appear and entries made since you last saved or pressed Enter are cancelled!

Top Function

The `Top function (--)` takes you to the top or beginning of the information or list you are looking at.

Bottom Function

The `Bottom function (++)` takes you to the bottom or end of the information or list you are looking at.

Asterisk List Function

The `Asterisk (*) List` function helps you if you don't know which libraries, files, fields, commands or objects for a particular command are available.

To obtain a list of the libraries available

- Enter an asterisk (`*`) in the `Library` field on a List Object Screen.

To obtain a list of the files available

- Enter an asterisk (`*`) in the `Enter File Name` field in the Add Transaction window.

To obtain a list of the fields available

- Enter an asterisk (`*`) in the Fieldname column in the Worksheet.

To obtain a list of the commands available

- Enter an asterisk (`*`) in the command line.

To obtain a list of objects available for a particular command

- Enter the command followed by a blank and an asterisk (*) in the command line.

  In each case a window appears displaying a selection list of the items available.

  The list of commands displayed depends on your position within Super Natural. For example, when you enter an asterisk (*) in the command line of Natural Report Manager, the command list you get is different from the list you get when you enter an asterisk (`*`) in the command line of the Menu.

Checklist Function

The `Checklist` function provides a framework which guides you through adding and modifying transactions. The Checklist window tells you which steps are available, which are mandatory and which are optional. You choose the steps you want to take and the `Checklist` function takes you from step to step automatically. Using the `Checklist` function, you only need the `NEXT` commands to navigate within Super Natural.

The `Checklist` function is intended for users less familiar with Super Natural. Users who are more familiar with Super Natural can invoke the Checklist window as a type of online help.

Switching the Checklist Function On

To switch the Checklist function on

1. Issue the `PROFILE` command from the Menu or an Object List screen.
2. Choose `Language Code` and `Checklist`
3. Mark the `Automatic Checklist` field.
4. Type in 1, 2 or 3 in the `On Level` field.
5. Press Enter.

The levels for the `Checklist` function determine how much guidance you are given when using the Worksheet.

Level	Description
1 (Global)	The Worksheet as a whole is offered as one option. When you invoke the Worksheet, all the columns available for the transaction modes you are working with are open.
2 (Mixed)	The Worksheet as a whole is is offered as one option and each input column of the Worksheet is shown additionally as a separate option (see description for Level 3).
3 (Detailed)	Each column of the Worksheet is offered as a separate option. When you invoke the Worksheet, you can only work on the columns which you have chosen in the Checklist window. These columns are presented one at a time as separate steps. In addition, the Fieldname column and the Information column are always open.

To switch the Checklist function off

- Remove the mark in the `Automatic Checklist` field in your user profile.

  For further information, see above.

Using the Checklist Function

When you add or modify a transaction with the `Checklist` function switched on, the Checklist window is the first thing to appear.

The Checklist window displays a selection list of all the steps you can take in your present situation and shows which you have already taken.

The Checklist window only offers the steps which are available according to the transaction modes you are using.

The following shows an example of the Checklist window for a reporting transaction with the transaction modes Data Selection `FULL-SCREEN` and Report Type `LIST`.

```
18:10                      ***** Super Natural *****                18.Dec.1998
SNZUL-S                       - Selection Editor -                       Friday

                                          +------------Checklist-------------+
      1  < AA                             !      Step                 Status !
      2  <                                !  __  Worksheet            O.K.   !
      3  <                                !  __  Selection            O.K.   !
      4  <                                !  __  Calculation                 !
      5  <                                !  __  Logic                       !
      6  <                                !  __  Userexit                    !
      7  <                                !  __                              !
      8  <                                !  __                              !
      9  <                                !  __                              !
     10  <                                !  __                              !
     11  <                                !  __                              !
     12  <                                !  __                              !
     13  <                                !  __                              !
     14  <                                !                                  !
     15  <                                +----------------------------------+
```

The Status column can contain the following entries:

Status	Description
O.K.	Step successfully completed
Incomplete	Step incomplete/ incorrect
No code	Step not carried out

You then use the Checklist window to select the step or steps you want to carry out.

To select a step

- Mark it with a number or any other non-blank character.

If you number steps, the step with the lowest number is carried out first and the step with the highest number is carried out last. The steps you mark with any other non-blank character are carried out in the order they appear in the list. If you mark the steps with a mixture of numbers and non-blank characters, the numbered steps are carried out first.

To take a step

- Issue the `NEXT` command.

  When you have successfully completed a step, issue the `NEXT` command to take you directly to the next step on your list. You can also issue direct commands to continue working with the transaction independently of the `Checklist` function.

  If you have completed all the steps you selected in the Checklist window, issuing the `NEXT` command invokes the Checklist window again.

  You can invoke the Checklist window at any point when you are adding or modifying a transaction by issuing the `CHECKLIST` command.

Using the Checklist Window Without the Automatic Checklist Function

If you are not working with the `Checklist` function, you can still invoke the Checklist window to help you when you are adding or modifying transactions.

To invoke the Checklist window

- Issue the `CHECKLIST` command.

  The Checklist window functions as described above.

Using the Next Function Without the Checklist Function

When you are adding or modifying a transaction, you can use the `Next` function without invoking the `Checklist` function. The `Next` function takes you through a default sequence of the steps necessary to complete the transaction and then invokes the Checklist window for further optional processing.

Navigation

As mentioned earlier in this section, Super Natural presents functions and information in screens and windows. There are several ways of moving or navigating between screens and windows in Super Natural.

Navigating Forwards

There are several methods for moving forwards through Super Natural (from the beginning of a function or a series of functions to the end):

To navigate forwards in Super Natural

- Select a menu option.

  For example, selecting the Profile option from the Menu invokes the Modify Profile screen.

  Or:

  Enter a command in the command line which invokes another screen or window.

  Or:

  Press a `PF` key which invokes another screen or window.

  For example, issuing the command `PROTOTYPE` from the Transaction List screen invokes thePrototype List screen.

  You can invoke a list of the commands available at any point in Super Natural by entering an asterisk (`*`) in the command line.

  Or:

  Enter a command abbreviation in the work area of a screen or window.

  For example, issuing the command abbreviation `MO` next to a transaction name on the Transaction List screen invokes the Worksheet.

  Or:

  Use the `Checklist` and `Next` functions.

  The `Checklist` and `Next` functions take care of navigation for you, as described earlier in this section.

  Or:

Issue a paging command.

You use paging commands to navigate within Object List screens, reports, List windows or a series of windows as described earlier in this section.

Navigating Backwards

You can use commands to interrupt or end a function and return to a previous stage in processing (navigate backwards).

To navigate backwards in Super Natural

- Issue one of the following commands, as available:
  - `EXIT`
  - `CANCEL`
  - `MENU`

  These functions are described in the section *PF Keys* earlier in this section.

Leaving Screens

To leave a screen

- Use the methods for navigating forwards and backwards described in the previous sections.

  Making another entry on a screen and pressing Enter results in processing and display of the results on the same screen.

Leaving Windows

To leave a window

1. Type in any data required.
2. Press Enter.

   Either the next window in the series appears or the screen from which the window was invoked reappears.

Online Help

The Super Natural help text system provides you with online help from any point in Super Natural. You can either invoke help for the particular situation you are in (field help) or invoke help on general topics independent of the situation you in (general help glossary). You can also invoke help on a particular command (command help glossary).

Note: When you are looking at online help, no further help is available.

Field Help

You can obtain information on the function of and possible input for a particular field.

To invoke help for a certain field

- Enter a question mark (?) in it.

  Many help windows and screens provide interactive help. You can select from a list of options given in the help screen and your selection is carried over onto the original screen.

General Help Glossary

You can obtain information on general topics from any point in Super Natural. The general help glossary also tells you where each topic is described in the *User's Guide*.

To invoke the general help glossary

1. Position the cursor in the command line and press PF1.

   Or:

   Issue the HELP command.

   A selection window containing a list of help topics appears.
2. Select the topic you want information on.

   A help window containing the help glossary entry appears. The window also tells you where the topic is described in the *User's Guide*.

Command Help Glossary

You can obtain information on a particular Super Natural command by invoking the command help glossary.

The command help glossary gives the following information on the commands known to Super Natural:

- A description of each command.
- Where to issue each command.

You can find the **command help glossary** (command list) in this documentation. The shortest possible abbreviation of each command is underlined.

To invoke the command information in this appendix online

1. Enter an asterisk (*) in the command line.

   The Command List window appears.
2. Position the cursor next to or on the command about which you want information.
3. Press PF1.

   A help window containing the help glossary entry appears.

Libraries

Super Natural stores objects in libraries. There are three types of libraries in Super Natural:

- Private libraries (single-user access)
- Common libraries (multiple-user access).
- Public libraries (multiple-user access read only)

All libraries can contain transactions, prototype programs and application programs.

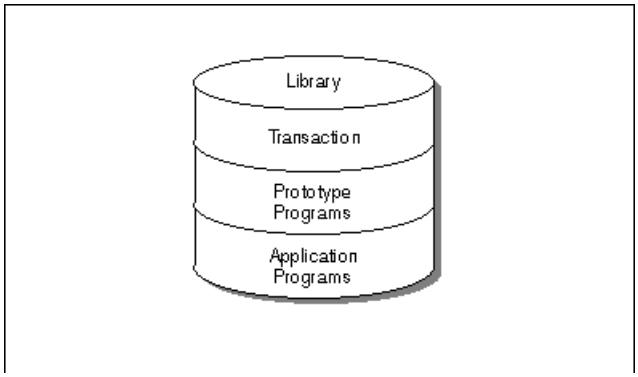

Private Libraries

Each Super Natural user has a private library (except in special cases). When you start a Super Natural session, you enter your private library when you invoke an Object List screen or the Modify Profile screen.

Note: If you don't have a private library, the Select Library window appears when you log on. The window contains a selection list of the libraries you are authorized to use.

No other user can access your private library. Your private library ID is the same as your user ID.

Common Libraries

Common libraries are created by the Super Natural administrator for use by multiple users.

The difference between private and common libraries is that all users can access common libraries.

Note: You cannot copy a transaction which creates a user file into a common library.

Users can perform the following commands on objects in common libraries:

- `EXECUTE`
- `MODIFY`
- `DELETE`
- `COPY`
- `INFO`
- `ADD`

Restricting Access to Transactions

When you copy a transaction into a common library, you can choose to restrict other users to executing it only.

To restrict transaction access to `EXECUTE` only

- Enter the character which corresponds to H4F on your keyboard in the first position in the Description column. For example, this character might be an exclamation mark (!).

  For further information, contact your administrator.

Public Libraries

Public libraries are created by the Super Natural administrator for use by multiple users. The administrator creates the objects contained in public libraries and decides which users may access each public library.

Users have read-only access to the objects in public libraries.

Users can perform the following commands on objects in public libraries:

- `EXECUTE`
- `COPY`
- `INFO`

Note: If you want to modify an item stored in a public library, you must first copy it into your private library.

Only the administrator can copy objects into a public library.

Copying Objects Between Libraries

The following diagram shows how you can use the Copy function to copy objects between libraries of different types:

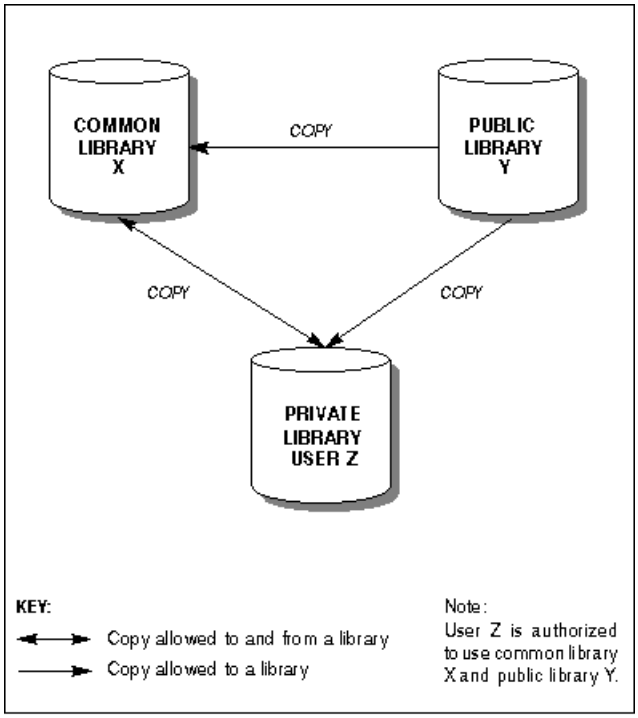

Changing Libraries

The Super Natural List Object screens contain a field named `Library` which displays the name of the library you are working in. By default, you work in your own private library and the field contains your user ID. Only the List User Files screen does not contain the `Library` field.

The field next to the `Library` field displays which type of library you are working in. The code U indicates a private library, C a common library and P a public library.

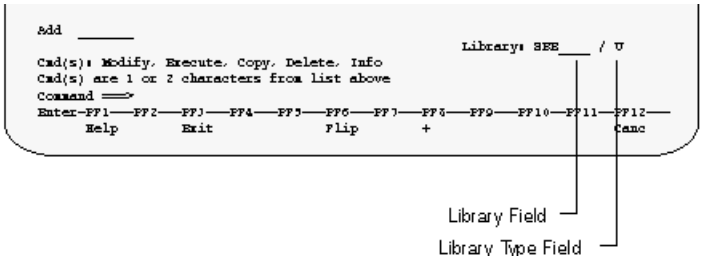

To change libraries

1 Access any Super Natural List Object screen.

2 Type the ID of the library you want to access in the `Library` field.

3 Type the library type code of the library you want to access in the `Library Type` field.

4 Press Enter.

If you enter a library name or type which does not exist, a selection list of the libraries or library types available appears.

Listing Libraries

To obtain a selection list of all the library types available

- Enter an asterisk (`*`) in the `Library Type` field.

To obtain a selection list of all the libraries available for the library type displayed

- Enter an asterisk (`*`) in the `Library` field.

Notepad Function

If you want to make notes whilst using Super Natural, you can use the notepad provided just as you would a piece of paper - the advantage is that it won't get lost!

Writing Notes

To write a note

1 Issue the `NOTEPAD` command from any point in Super Natural.

The following window appears:

```
18:20                      ***** Super Natural *****                18.Dec.1998
SNZUL-S                       - Selection Editor -                       Friday
                                                                              ↩

                                  +-----------------Notepad-----------------+
      1  <                          !                                        ↩
!
      2  <                          ! Notepad subject: ( * to select)        ↩
!
      3  <                          !   ________________________________     ↩
!
      4  <                          ! Description:                           ↩
!
      5  <                         !   ________________________________________ !
      6  <                         !   ________________________________________ !
      7  <                         !   ________________________________________ !
      8  <                         !   ________________________________________ !
      9  <                         !   ________________________________________ !
     10  <                         !   ________________________________________ !
     11  <                         !   ________________________________________ !
     12  <                         !   ________________________________________ !
     13  <                         !   ________________________________________ !
     14  <                         !   ________________________________________ !
     15  <                          !                                        ↩
!
                                  +-----------------------------------------+
                                                                              ↩

Command ===>                                                                  ↩

Enter-PF1---PF2---PF3---PF4---PF5---PF6---PF7---PF8---PF9---PF10--PF11--PF12---
                  Exit              Flip                                Canc ↩
```

If you have already written notes, the note whose title is first in the alphabet is displayed.

2 Type in a name to identify your note in the `Notepad Subject` field.

Or:

Overtype the title of the note which is displayed.

3 Type the text of the note in the Description lines.

Or:

Overtype the text of the note which is displayed with the text of the note you are writing.

4 Press Enter.

Listing Notes

To get a list of all existing notes

- Enter an asterisk (*) in the title line.

  A window appears displaying a selection list of the notes available.

To display the note you want to see

1. Mark it.
2. Press Enter.

Deleting Notes

To delete the note displayed

- Enter X in the input field below (X to erase).

Modifying Notes

To modify the text of a note

1. Type over the existing text.
2. Press Enter.

Closing the Notepad

To close the notepad

- Press PF8.

  The last note is automatically saved.

Technical Information Function

The `Technical Information` function provides you with technical information concerning your environment as in the following example:

```
18:01                      ***** SUPER NATURAL *****                2999-04-28
                             - Transaction List -                       SN1000

        +-----------------------Technical Information-----------------------+
        ! NSN Version ......... 9.2.2           Operating System .. MVS/ESA  !
        ! PersonalDB-File ..... (167,93)        TP Monitor ........ COMPLETE !
        !                                       Device Type ....... COLOR    !
        ! NATURAL Version ..... 9.2.1                                        !
        ! PREDICT Version ..... 8.5.1           AOS Version ....... 2.2.2    !
        !                                       NSC Version ....... 9.1.1    !
        !                                                                    !
        ! Buffer Sizes:   Esize ..     k  DATsize ...    k  Usize ..    k     !
        !                 Fsize ..     k  SORTsize ..    k  Csize .. 20 k     !
        !                                                                    !
        ! Last Error Number ... 1101                                         !
        ! Last Error Program ..                 Last Error Line ...   34     !
        !                                                                    !
        ! Program: ________ was cataloged at                                 !
        !                                                                    !
       +--------------------------------------------------------------------+  ↩

Command ===>


Enter-PF1---PF2---PF3---PF4---PF5---PF6---PF7---PF8---PF9---PF10--PF11--PF12---
      Help        Exit              Flip                                Canc
```

The `Technical Information` function is always available.

To invoke the Technical Information screen

- Issue the `TECH` command.

4 Starting Up

- Starting a Super Natural Session 44
- How is Super Natural Organized? 44
- Choosing an Object Type or Function 45
- Choosing an Object 47
- Working with an Object 50

This section tells you how to start a session in Super Natural.

This section covers the following topics:

- **Starting a Super Natural Session**
- **How is Super Natural Organized?**
- **Choosing an Object Type or Function**
- **Choosing an Object**
- **Working with an Object**

Starting a Super Natural Session

Within Super Natural you are identified by a user ID. If your user ID has not already been specified by the teleprocessing monitor or by Natural Security, you must specify it yourself when you log on to Super Natural for the first time.

Your Super Natural administrator can tell you how to log on to Super Natural in your environment.

How is Super Natural Organized?

Everything you can do with Super Natural can be put into one of three categories:

- Choosing an object type or function
- Choosing an object
- Working with an object

The following diagram shows how Super Natural is organized.

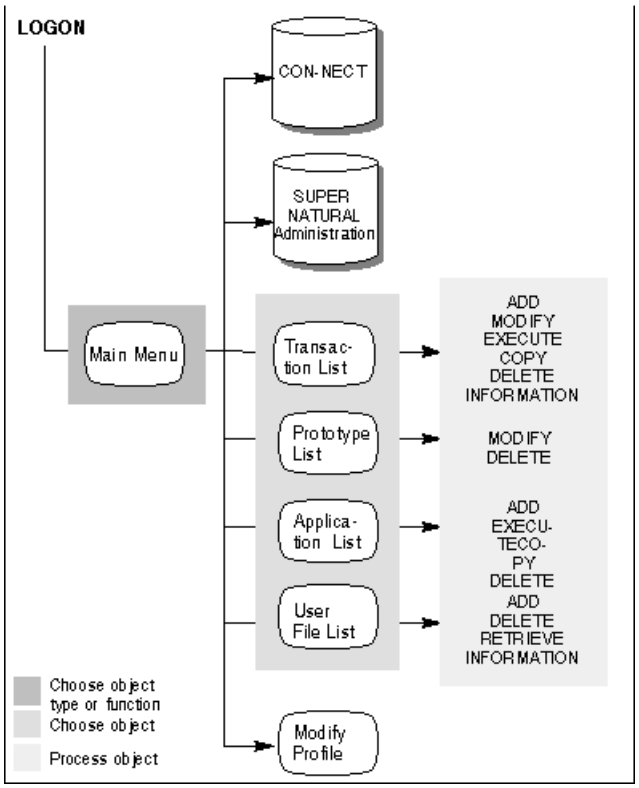

Choosing an Object Type or Function

Main Menu

At the start of each Super Natural session, the Main Menu gives you access to the object types available to you. You can also leave Super Natural by choosing the Super Natural administration function. The Main Menu contains the standard header and command area. You use the work area to choose an object type or function.

If the Main Menu is not the first screen to appear when you log on to Super Natural, don't worry! Your user profile has been changed. You can invoke the Main Menu by issuing the `MENU` command.

```
14:46                      ***** SUPER NATURAL *****                2999-03-04
                                 - Main Menu -                          SN1000



             TR    Transactions
             PROT  Prototype Programs

             AP    Application Programs
             USERF User Files

             PROF  User Profile

             MA    Super Natural Administration



Command ===>                                                                ↩



Select object type or function

Enter-PF1---PF2---PF3---PF4---PF5---PF6---PF7---PF8---PF9---PF10--PF11--PF12---
      Help        Exit              Flip                                Canc
```

Object Types and Functions - Work Area

The Main Menu displays all the objects types offered by Super Natural and also offers the Super Natural administration functions. These object types and functions comprise the major branches of Super Natural.

Some object types or functions may not be available to you. If this is the case, the selection field next to the object types or function is protected so you cannot select it.

The following table shows the object types and functions offered by Super Natural and what happens when you select them:

Object/Function Type	What happens when you select it
Transactions	Transaction List screen appears.
Prototype Programs	Prototype List screen appears.
Application Programs	Application List screen appears.
User Files	User File List screen appears.
User Profile	Modify Profile screen appears.
Super Natural Administration	You invoke the Super Natural Administration application. The Super Natural Administration Menu appears.

The object types available from the Main Menu are discussed in detail later in this documentation.

The Super Natural Administration application is described in the *Administration* documentation.

You can also access the object types and functions available from the Main Menu directly from the Object List screens and from the Modify Profile screen by issuing the relevant commands. For further information on commands, see ***Command List***.

Choosing an Object

When you have chosen an object type, either an object list screen or the Modify Profile screen appears where you can choose which object you want to process.

You can change your user profile so that when you log on to Super Natural, one of the Object List screens is the first to appear instead of the Main Menu.

Modify Profile Screen

The Modify Profile screen is described in the section *User Profile*.

Object List Screens

There are list screens for each Super Natural object type.

To move between object list screens

- Enter an object keyword in the command line.

  The following object type keywords are available:

Object Type	Keyword
Transaction	TRANSACTION
Prototype Programs	PROTOTYPE
Application Programs	APPLICATION
User Files	USERFILE

The screen below is the Transaction List screen and is representative of all object list screens:

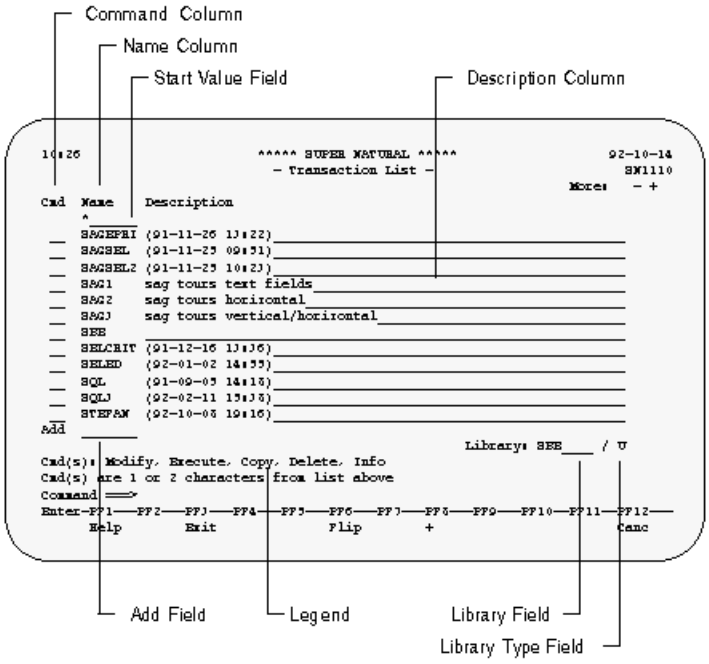

Command Column

The Command column is two characters wide and you can use it to perform commands on an object listed in the Name column. The commands you can use are listed in the legend.

To perform a command on an object listed in the Name column

- Enter a two-character command abbreviation next to it in the Command column.

  Some commands invoke windows on the current screen and other commands display another screen.

Name Column

The Name column lists all the objects stored in the library you are using. You can use PF8 or the + command to page forward in your list of objects and PF19 or the -- command to get to the top of the list again.

Description Column

The creation time and date of each object are automatically entered in the Description column. You can enter descriptions to help you identify what each object does (optional). You can modify or delete existing descriptions (including creation time and date) by overtyping.

If the first character in the description of a transaction is an exclamation mark (!), you can execute the transaction but you can only modify it if you created the transaction yourself.

Start Value Field

You use the `Start Value` field to restart the object list at the name, letter or character you define. This saves time paging if you have large numbers of objects. You can make the following entries in the `Start Value` field:

Entry	Result
Value*	The object list displays all the objects whose names start with the specified value. For example, if you enterDE*, all the objects whose names start with DE are listed.
Value<	Lists all the objects which are listed beforethe value specified. For example, if you enterDE<, all the objects whose names start with AA through to all objects whose name start with DD are listed.
Value>	Lists all the objects which are listed after the value specified. For example, if you enterDE>, all the objects whose names start with DE through to the end of the list are displayed.
Object-name	The object list lists that object only.

Add Field - Not in Prototype List

You can use the `Add` field to add a new object instead of issuing the `ADD object-type object-name` command.

To add an object

- Enter a new object name in the `Add` field.

Naming Conventions

An object name can have up to seven characters. Super Natural tells you if a character is not allowed.

Legend

The legend lists the commands you can use in the command column. Use the first two letters (or just the first letter if the command remains unique) of the commands listed.

Library Field

The `Library` field indicates which library you are using. For further information on libraries, see ***Libraries*** in *Using Super Natural*.

The Library Type Field

The `Library Type` field indicates type of library you are using. For further information on libraries, see ***Libraries*** in *Using Super Natural*.

Working with an Object

You can issue commands to be performed on particular objects from the Object List screens or the Modify Profile screen.

Once you have chosen an object and perform a command on it, a variety of things can happen according to object type, transaction type and transaction modes. For example, a window, an editor or the Worksheet may appear.

Each object type is described in its own section later in this documentation.

In the case of transactions, the processing which takes place once you have left the Transaction List screen is referred to as being within a transaction.

5 Using Reporting Transactions

- What are Reporting Transactions? 52
- Listing Transactions 53
- Adding Transactions 53
- Keeping Transactions 58
- Saving Transactions 58
- Running Transactions 59
- Reports Which are Too Wide 59
- Modifying Transactions 61
- Executing Transactions 62
- Copying Transactions 62
- Deleting Transactions 64
- Information (Info) Function 65
- Commands Available From Within a Transaction 67

This section describes reporting transactions and the commands which you can use with them.

Note: Data maintenance transactions are described in the section Data Maintenance Transactions later in this documentation.

This section covers the following topics:

- **What are Reporting Transactions?**
- **Listing Transactions**
- **Adding Transactions**
- **Keeping Transactions**
- **Saving Transactions**
- **Running Transactions**
- **Reports Which are Too Wide**
- **Modifying Transactions**
- **Executing Transactions**
- **Copying Transactions**
- **Deleting Transactions**
- **The Information (Info) Function**
- **Commands Available From Within a Transaction**

What are Reporting Transactions?

Reporting transactions are the most important part of Super Natural.

Super Natural's main task is to obtain data from a database file, work file or PC file. Reporting transactions provide you with the framework necessary to tell Super Natural which data you want.

Modes for reporting govern the basic conditions under which the transaction runs, for example report type and report destination.

For further information on modes, see ***Modes for Reporting*** in *Defining Transaction Modes for Reporting*.

When you have finished adding a reporting transaction and run it, Super Natural provides you with the data you have requested in the form of a report.

Note: You can use the `CHECKLIST` function and the `NEXT` function to help you add and modify reporting transactions. For further information, see ***Using Super Natural***.

Listing Transactions

To obtain a list of transactions

- Select the object type `Transactions` from the Menu

  Or:

  Issue the `TRANSACTION` command.

  The Transaction List screen appears. The Transaction List screen lists both reporting and data maintenance transactions.

  The Transaction List screen functions in the same way as all Object List screens in Super Natural.

  For information on how to use object list screens, see ***Object List Screens*** in *Starting Up*.

Adding Transactions

The following diagram gives you an overview of the paths you can take when adding a reporting transaction. The diagram shows you which steps are mandatory and which are optional.

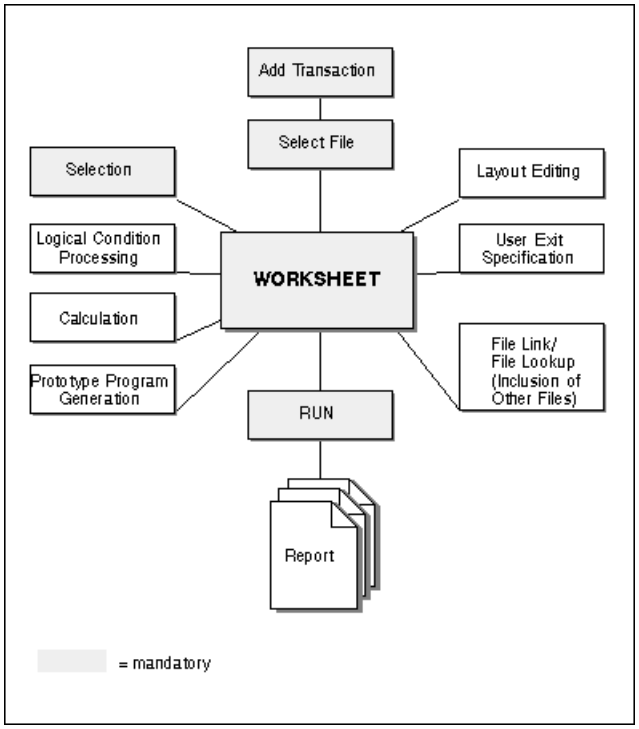

To add a transaction

1 Enter a new transaction name in the `Add` field.

Or:

Issue the `ADD TRANSACTION` command.

The Add Transaction window appears:

```
11:56                      ***** Super Natural *****                  93-01-04
                             - Transaction List -                       SN1110
                                                                             ↩

Cmd  Name     Descript +-------------------Add Transaction--------------------+
     *______            !                                                      ↩
!
 __  ADD      ________ ! Transaction ID .... _______                          ↩
!
 __  AUTO     ________ ! Description ....... (93-01-04 11:56)_______________  ↩
!
 __  CHECKL   !91-11-2 !                     ______________________________  ↩
!
 __  CONT     (92-01-1 !                                                     ↩
!
 __  CONTROL  control  ! File name ......... ________________________________ !
 __  CONT2    (91-09-1 !                                                     ↩
!
 __  CONT3    1-09-18  ! Modify modes ...... _                               ↩
!
 __  CONT4    PERSONNE ! Data maintenance .. N (Y/N)                         ↩
!
 __  DATACH   (92-11-1 !                                                     ↩
!
 __  DATACH2  (92-11-1 +-----------------------------------------------------+
```

2 Enter a new transaction name in the `Transaction ID` field if no name is present.

3 Modify or delete the transaction description if required.

4 If you know the name of the file you want to get your data from, enter it in the `File Name` field.

The file you choose here is called your *primary file*.

5 If you don't know the name of the file you want to use, enter an asterisk (*).

The File Selection List window appears:

```
11:56                        ***** Super Natural *****                  93-01-04
                               - Transaction List -                       SN1110
                                                                              ↩

Cmd  Name     Descript + +----------------File Selection List-----------------+
     *______            ! !     File Name                          Access  Info !
 __  ADD      ________ ! !  _  SAG-TOURS-E-CH-PRICES                 R      _  ↩
!
 __  AUTO     ________ ! !  _  SAG-TOURS-E-COMPANY                   R      _  ↩
!
 __  CHECKL   !91-11-2 ! !  _  SAG-TOURS-E-CONTRACT                  D      _  ↩
!
 __  CONT     (92-01-1 ! !  _  SAG-TOURS-E-CONTRACT-WRKMKO           D      _  ↩
!
 __  CONTROL  control  ! !  _  SAG-TOURS-E-CRUISE                   R      _  ↩
!
 __  CONT2    (91-09-1 ! !  _  SAG-TOURS-E-PERSON                   R      _  ↩
!
 __  CONT3    1-09-18  ! !  _  SAG-TOURS-E-YACHT                    R      _  ↩
!
 __  CONT4    PERSONNE ! !  _  SPOOL-QUEUE                          R      _  ↩
!
 __  DATACH   (92-11-1 ! !  _  SUBMIT                               R      _  ↩
!
 __  DATACH2  (92-11-1 + !  _  SUE                                  R      _  ↩
!
 __  DATACH3  Destinatio !  _  SUP-AAA                              R      _  ↩
!
 __  DATACH4  DATA MAINT !  _  SYSSND                               R      _  ↩
!
Add  _______             !  _  SYSTEM1                              R      _  ↩
!
                         !                                                   ↩
!
Cmd(s): Modify, Execute, +More: - +-----------------------------------------+
                                                                              ↩
```

The File Selection List window displays a selection list of the files which you can use and also contains the following columns:

Column Description

Access S indicates a superfile and F indicates a user file. For further information on superfiles, see *Defining Files*. For further information on user files, see *User Files*. The codes R, U, A, D and * indicate file access level. File access levels are only relevant for data maintenance transactions. For further information on data maintenance transactions, see *Working with Data Maintenance Transactions*.

Column Description

Info	Mark this column to obtain first comments if available and then an extended file description from the data dictionary *Predict*. This feature is only available at sites where Predict is installed. No dictionary information is available for user files.

Inserting fields into a DDM or deleting them affects Super Natural's internal field referencing. This means that you may either not be able to run existing transactions or that running them will result in unpredictable data.

To insert a field

1 Select your primary file.

2 Press Enter.

You are returned to the Add Transaction window. The name of the file you have selected is entered in the `File Name` field.

3 Mark the `Modify Modes` field to modify your default transaction modes for the current transaction only.

If you don't mark this field, you continue to add the transaction using your default modes. For further information on transaction modes, see ***Defining Transaction Modes for Reporting*** and ***Defining Transaction Modes for Data Maintenance***.

4 Enter Y in the `Data Maintenance` field if you want to add a data maintenance transaction.

For further information on data maintenance transactions, see ***Working with Data Maintenance Transactions***.

If you leave the default setting N (No), you continue to add a reporting transaction.

5 Press Enter.

The Worksheet appears:

```
12:06                      ***** Super Natural *****                 04.Jan.1998
SN3011                           - Worksheet -                           Monday
                                                                              ↩

Ref DB    Field Name                          Seq   S/C  Func Def  Info Del   ↩

AQ        ________________________________    ___   ___   __   __   __   __   ↩

AR        ________________________________    ___   ___   __   __   __   __   ↩

AS        ________________________________    ___   ___   __   __   __   __   ↩

AT        ________________________________    ___   ___   __   __   __   __   ↩

AU        ________________________________    ___   ___   __   __   __   __   ↩

AV        ________________________________    ___   ___   __   __   __   __   ↩

AW        ________________________________    ___   ___   __   __   __   __   ↩

AX        ________________________________    ___   ___   __   __   __   __   ↩

AY        ________________________________    ___   ___   __   __   __   __   ↩

AZ        ________________________________    ___   ___   __   __   __   __   ↩

BA        ________________________________    ___   ___   __   __   __   __   ↩

BB        ________________________________    ___   ___   __   __   __   __   ↩

BC        ________________________________    ___   ___   __   __   __   __   ↩

BD        ________________________________    ___   ___   __   __   __   __   ↩

                                                                              ↩

                                                                              ↩

Enter "*" in Fieldname column to select fields or enter NEXT                  ↩

Command ===>                                                                  ↩

Enter-PF1---PF2---PF3---PF4---PF5---PF6---PF7---PF8---PF9---PF10--PF11--PF12---
      Help  Next  Exit  Incl        Flip  -     +           Sel   Run   Canc ↩
```

For information on how to use the Worksheet, see *Working with the Worksheet*.

As shown in the diagram at the beginning of this section, you can leave the Worksheet to perform one of several major functions in any order you wish. The following table shows the major functions available from the Worksheet and where they are documented:

Function	section Where it is Documented
Selection criteria specification (mandatory)	Editors
Calculation criteria specification	Editors
Logical condition criteria specification	Editors
User exit specification	User Exits
Layout editing	Natural Report Manager
File linking and/or lookup (Including other files in the transaction)	Files
Prototype program generation	Prototype Programs

Keeping Transactions

If you want to, you can keep a transaction which is either not finished or still has errors in it and finish it later.

To save a transaction which is incomplete or has errors in it

- Issue the `KEEP` command from within the transaction.

Note: You cannot execute the transaction (for example from the Transaction List) if it has errors or is incomplete.

Saving Transactions

If you have completed a transaction but do not want to see the results immediately, you can save it.

To save a transaction

- Issue the `SAVE` command from within the transaction.

  Note: You cannot save a transaction which has errors in it.

  If the report is too wide, the Report Line Length window appears. For further information, see *Reports Which are Too Wide*.

Running Transactions

If you want to see the results of a transaction, you must run it.

To run a transaction

- Issue the `RUN` command from within the transaction.

  Super Natural then provides you with the data you require in the form you have chosen. The transaction is saved.

Note: You cannot run a transaction which has errors in it.

If you want to run an existing transaction without modifying it, it is most efficient to issue the `EXECUTE` command from the Transaction List screen.

Note: For further information on the `SAVE`, `KEEP`, `RUN` and `EXECUTE` commands, see *Command List*.

If the report is too wide, the Report Line Length window appears. For further information, see *Reports Which are Too Wide*.

Reports Which are Too Wide

When using the transaction modes Destination SCREEN, PRINTER, or EDITOR, you may select so many fields for display that they exceed the width (line length) of the screen or printer to which you are sending the report. If your report is too wide, the Report Line Length window appears when you save or run the transaction:

```
12:10                      ***** Super Natural *****                 04.Jan.1998
SNZUL-S                       - Selection Editor -                       Monday

                         +-----------------Report Line Length-----------------+
      1  < AA             !                                                    !
      2  <                ! The selected fields required a line size of .. 149 !
      3  <                ! The field headers required a line size of .... 193 !
      4  <                ! The available Online  line size at present ... 79  !
      5  <                !                                                    !
      6  <                !   _  Enlarge Available Line Size                   !
      7  <                !   _  Change to Report Type Vertical List           !
      8  <                !   _  Truncate Headers                              !
      9  <                !   _  Remove Excess Fields                          !
     10  <                !   _  Remove Excess Fields and Truncate Headers     !
     11  <                !   _  Modify Transaction                            !
     12  <                !                                                    !
     13  <                +----------------------------------------------------+
     14  <                                                              >   14
     15  <                                                              >   15
```

The Report Line Length window also appears if the headers of the fields you have selected for display exceed the width (line length) of the screen or printer to which you are sending the report.

The Report Line Length window tells you the line length of the fields and headers you have selected for display, the line length available at present and the Report Destination you are using. The Report Line Length window offers the following options:

Option	Description
Enlarge available line size	`Report Destination SCREEN`: The line size can be enlarged to 249 and you can look at the data using the shift functions. `Report Destination PRINTER`: You must make sure that the line size of your report does not exceed that of your printer. `Report Destination EDITOR`: The line size can be enlarged to 249. If the length of the fields or headers you have selected for display exceeds these values, this option is not available.
Change To Report Type Vertical List	The report is displayed as for Report Type Vertical List. Each record is displayed on a separate screen with the display fields and their values listed vertically.
Truncate Headers	If only the headers are too wide, you can opt to truncate them (only available if your transaction option setting for Heading Width Override = N).
Remove Excess Fields	Fields are removed from the right-hand side of the report until the required line length is achieved.
Remove Excess Fields	Fields are removed from the right-hand side of the and Truncate Headers/tab/report and headers are truncated until the required line length is achieved.

Option	Description
Modify transaction	You are returned to the Worksheet where you can modify your report. For example, you can modify your transaction options to make the online screen size larger (for further information, see ***Working with User Files***) or you can modify the width of the columns and their headers by changing their output definition (for further information, see ***The Field Definition Column*** in *Working with the Worksheet*).

Modifying Transactions

You may want to go back and modify (change) a transaction once you have run it or modify an existing transaction.

To modify a transaction

- Enter the command abbreviation `MO` in the command column of the Transaction List screen next to the transaction name.

  Or:

  Issue the `MODIFY TRANSACTION` *`name`* command.

  The Worksheet appears.

  You may not change the following when modifying a transaction:

  - File specification
  - Certain reporting modes. For example, if you created a transaction using the data selection mode SQL-SELECT, you may not change it.

Transactions with Restricted Access

If you are in a common library, some transactions may have restricted access. Transactions with restricted access are marked with an exclamation mark (!) in the first position in the Description column and you can only execute them.

Executing Transactions

If you want to run an existing transaction without modifying it, it is most efficient to issue the `EXECUTE` command from the Transaction List screen. This is because when you issue the `EXECUTE` command, Super Natural uses the transaction as it was when the transaction was last run or saved. When you run a transaction using the `RUN` command, Super Natural completely recreates the transaction even if you have not modified it since it was last run or saved.

To execute a transaction

- Enter the command abbreviation `EX` in the command column of the Transaction List screen next to the transaction name.

  Or:

  Issue the `EXECUTE TRANSACTION` *`name`* command.

  For further information on the `SAVE`, `KEEP`, `RUN` and `EXECUTE` commands, see ***Command List***.

Note: You cannot execute a transaction which you left using the `KEEP` command.

Copying Transactions

You may not copy a transaction into a public library.

You may not copy transactions with destination USERFILE.

To copy a transaction

1. Enter the command abbreviation `CO` in the command column of the Transaction List screen next to the transaction name.

   Or:

   Issue the `COPY TRANSACTION` *`name`* command.

   The Copy window appears:

```
13:55                      ***** Super Natural *****                 04.Jan.1998
SN1110                       - Transaction List -                         Monday
                                                                              ↩

Cmd  Name     Description              +----------------Copy-----------------+
     *______                             !                                    ↩
!
 __  ADD      __________________________ ! Source object ... AUTO             ↩
!
 CO  AUTO     __________________________ !                                    ↩
!
 __  CHECKL   !91-11-26 16:21)_________ ! Target object ... AUTO___          ↩
!
 __  CONT     (92-01-16 11:30)_________ ! Common library .. _______          ↩
!
 __  CONTROL  control breaks___________ !                   (leave blank for ↩
!
 __  CONT2    (91-09-17 16:06)_________ !                   private library) !
 __  CONT3    1-09-18 14:24____________ !                                    ↩
!
 __  CONT4   PERSONNEL FILE + IA______ +-------------------------------------+
```

The `Source Object` field contains the name of the transaction you want to copy.

2 Enter the name you want the copy to have in the `Target` field.

If you do not make an entry in this field, the copy will have the same name as the original transaction.

You may not have two or more transactions with the same name in the same library. If you copy a transaction into another library where a transaction of the same name already exists, you are asked if you want to overwrite the existing transaction.

3 If you want to copy the transaction into a common library, enter its name in the `Common Library` field.

If you leave this field blank, the transaction is copied into your private library.

When you copy a transaction to a new name, the `Information` function does not show the new name until you modify the transaction.

Deleting Transactions

To delete a transaction

1 Enter the command abbreviation `DE` in the command column of the Transaction List screen next to the transaction name.

Or:

Issue the `DELETE TRANSACTION` *`name`* command.

The Confirm Delete window appears:

```
13:56                      ***** Super Natural *****                 04.Jan.1998
SN1110                       - Transaction List -                         Monday
                                                                              ↩

Cmd  Name     Description                                                     ↩

     *______                                                                  ↩

 __  ADD     ____________________________________________________________     ↩

 de  AUTO    _ +--------------Confirm Delete---------------+ ____________     ↩

 __  CHECKL   ! !                                          ! ____________     ↩

 __  CONT     ( !                                          ! ____________     ↩

 __  CONTROL  c !        Delete transaction AUTO           ! ____________     ↩

 __  CONT2    ( !                                          ! ____________     ↩

 __  CONT3    1 !        Enter Y to confirm: N             ! ____________     ↩

 __  CONT4    P !                                          ! ____________     ↩

 __  DATACH   ( !                                          ! ____________     ↩

 __  DATACH2  ( !                                          ! ____________     ↩

 __  DATACH3  D !                                          ! ____________     ↩

 __  DATACH4  D +------------------------------------------+ ____________     ↩

Add  _______                                                                  ↩
```

2 Enter Y to confirm the deletion.

You can also delete several transactions at the same time. In this case, the Confirm Multiple Delete window appears. You can choose if you want to confirm each deletion, delete without confirmation or cancel the deletion.

Information (Info) Function

To obtain information about a transaction

- Enter the command abbreviation `IN` in the command column of the Transaction List screen next to the transaction name.

  Or:

  Issue the `INFO TRANSACTION` *`name`* command.

  The Transaction Information window appears:

```
13:57                      ***** Super Natural *****                04.Jan.1998
SN1110                       - Transaction List -                        Monday
                                                                              ↩

Cmd  Name  +--------------------Transaction Information----------------------+
     *____ ! Transaction .......... DATACH   Version .... 3.1.0               ↩
!
 __  ADD   ! Created/modified by .. SBE     Date/Time .. 1992/11/11 14:30:43 !
 __  AUTO  ! Description .......... (92-11-11 11:39)                         ↩
!
 __  CHECK !                                                                 ↩
!
 __  CONT  ! Type ................. Report                                  ↩
!
 __  CONTR ! Selection ............ Full-screen                             ↩
!
 __  CONT2 ! Data change .......... Map                                     ↩
!
 __  CONT3 ! Report type .......... List                                    ↩
!
 __  CONT4 ! Report level ......... Detailed                                ↩
!
 in  DATAC ! Destination .......... Screen                                  ↩
!
 __  DATAC ! Run mode ............. Online                                  ↩
!
 __  DATAC ! Primary file ......... SAG-TOURS-E-COMPANY                     ↩
!
 __  DATAC ! Sec. file ............                                          ↩
!
Add  _____ ! Userfile ............                                          ↩
!
           !                                                                 ↩
!
Cmd(s): Mo +More:   +-------------------------------------------------------+
                                                                              ↩
```

The Transaction Information window supplies the following information:

- Transaction name
- Super Natural version with which the transaction was created
- Who created/last modified the transaction
- When the transaction was created/last modified
- User-entered transaction description
- Information about the transaction modes (Report Type, Data Selection etc.)

- Primary file
- Secondary file (if defined)
- Name of user file (for Destination USER FILE)

You can page forward to obtain information on the following if relevant to the transaction:

- Link and lookup fields used.
- Selection criteria
- Calculation
- Logical conditions
- Fields used

When you print the information, you are also provided with information on the entries made in the Worksheet.

Note: When you copy a transaction to a new name, the Information function does not show the new name until you modify the transaction.

Commands Available From Within a Transaction

The following commands are available from within a transaction (the default PF key functions and commands specific to the Worksheet are not included):

Note: For a list of the default PF key functions, see *Using Super Natural*.

Note: For a list of commands specific to the Worksheet, see *Working with the Worksheet*.

Command (Abbreviation)	Description
CALCULATION (CAL)	Invokes the Calculation Editor.
CHECKLIST (CHECKL)	Invokes the Checklist window (not in Natural Report Manager).
COUNT (COU)	Counts the number of records found by the present transaction but does not display the resulting data.
GENERATE (GE)	Generates a prototype program from the transaction you are working on. You cannot generate a prototype program from a transaction which is not finished.
INCLUDE (INC)	Invokes the Include Files window where you can do the following (not in Natural Report Manager):

Command (Abbreviation)	Description
	- Change the original primary file (as long as no fields have been used or user fields defined) - Define/change a secondary file - Define/change the lookup file(s)
KEEP (K)	Keeps any transaction even if it contains errors. When you keep a transaction, the commentary lines (transaction specification) for a Natural program are generated and saved but the Natural program for the transaction itself is not generated. If you keep a transaction which has already been run or saved, the program generated by the run or save is deleted and only the commentary line are kept.
LAYOUT (LA)	Invokes the Layout Editor which displays either the default layout for the current transaction or a layout you have already edited.
LOGICS (LOG)	Invokes the Logical Conditions Editor.
MODES (MODES)	Invokes the Modify Modes for Reporting or the Modify Modes for Data Maintenance window depending on the type of transaction you are creating or modifying. The modifications you make in these windows are only valid for the current transaction. Issue from within a transaction (not in Natural Report Manager).
NEXT (NE)	Takes you to the next step you have selected in the Checklist window. If you have selected no further function, the Checklist window appears. (not in Natural Report Manager).
OPTIONS (O)	Invokes the Transaction Options window. The modifications you make in this and the following windows are only valid for the current transaction (not in Natural Report Manager).
RELEASE (REL)	All fields not currently in use in a transaction are removed from the source area and are no longer available. For example, if you invoke the Field List window from an editor or the Worksheet, only the fields in use when you issued the `RELEASE` command are listed. If you are using very large files, you can use this command to avoid problems with temporary memory capacity (buffer overflow) (not in Natural Report Manager).
RUN (RU)	Runs a transaction you are modifying or creating. You cannot run a transaction which is not finished or still has errors in it When you run a transaction, a Natural program is generated, cataloged and executed.
SELECTION (SEL)	Invokes the Selection Editor, PC file editor or Work File editor depending on the selection mode setting.
SAVE (SA)	If you have completed a transaction but do not want to see the results immediately, you can save it. You cannot save a transaction which still has errors in it. You can execute a transaction using the `EXECUTE` command when it has been saved. When you save a transaction, a Natural program is generated and cataloged but not run.

Command (Abbreviation)	Description
TABULAR (TABU)	Invokes the Tabular Report Specification screen when you are adding a report of report type TABLE. Issue from within a transaction of report type TABLE (not in Natural Report Manager).
USEREXIT (USERE)	Invokes the Exit Specification screen.
WORKSHEET (W)	Invokes the Worksheet (not in Natural Report Manager).

6 Working with the Worksheet

- What is the Worksheet? 72
- Field Reference Column 74
- Database Reference Column 74
- Field Name Column 76
- Sequence Column 81
- Sort/Control Column 87
- Option Column 90
- Function Column 90
- Field Definition Column 97
- Information (Info) Column 100
- Delete Column 101
- Commands Available from the Worksheet 102

This section describes the Worksheet and how to use it.

This section covers the following topics:

- **What is the Worksheet?**
- **Field Reference (Ref) Column**
- **Database Reference (DB) Column**
- **Field Name Column**
- **Text Variable Column**
- **Sequence (Seq) Column**
- **Sort/Control (S/C) Column**
- **Option Column (Opt)**
- **Function (Func) Column**
- **Field Definition (Def) Column**
- **Information (Info) Column**
- **Delete (Del) Column**
- **Commands Available from the Worksheet**

What is the Worksheet?

The Worksheet is invoked when you add or modify a transaction. When you are adding a transaction, the Worksheet is empty when it first appears.

The Worksheet consists of columns. Different versions of the Worksheet appear according to the mode you are working in. For example, if you are using the report type TABLE, the Sequence column does not appear and the Option column only appears if you are adding or modifying certain types of data maintenance transaction.

Reference Columns

The following columns provide field information and are always displayed:

- Field Reference (Ref) Column
- Database Reference (DB) Column

Input Columns

The following are input columns and may not always be displayed:

- Field Name column
- Text Variable column
- Sequence (Seq) column
- Sort/Control (S/C) column
- Option (Opt) column
- Function (Func) column
- Field Definition (Def) column
- Information (Info) column
- Delete (Del) column
- Key column

The number and type of columns which are displayed depend on the type of transaction you are adding or modifying.

Function Codes

You can enter two-letter function codes in all of the input columns except for the Field Name column and the Text Variable column.

If you are not sure what to enter in the columns, you can use the online help system to obtain information.

To obtain information on what to enter in a column

- Enter a question mark (?) opposite the relevant field.

Column Protection - Columns "Closed"

When you have selected a field, the columns you can use in conjunction with it are opened. The input fields in the Worksheet columns open and close according to the entries you make on the Worksheet and elsewhere in Super Natural. Super Natural only allows you to make an entry where an entry is meaningful. For example, you cannot define a sort or control break for a group field and you cannot display a phonetic descriptor.

Field Reference Column

The Reference (Ref) column contains two-letter field references from AA to ZZ given by Super Natural. The reference identifies the field's position within the file. You can always use a field reference instead of a field name.

The fields of the file or files you have chosen are given the first field references. When you create a transaction, the list of field references starts at the first undefined field. For example if you have chosen a file which contains 26 fields, the field reference list starts at the field reference BA.

Note: The letters in the Reference column have nothing to do with database field references.

Database Reference Column

The Database Reference (DB) column contains up to four one-character abbreviations which give you information on the fields selected.

The following tables show the abbreviations and their descriptions.

Position 1

The first position in the `Database Reference` column shows which file the field comes from.

Abbreviation	Description
1	Primary File
2	Secondary File
L	Lookup File

Position 2

The second position in the `Database Reference` column shows information on the type of field selected.

Abbreviation	Description
No abbreviation	Elementary field or multiple-value field
G	Periodic group or group
H	Hyperdescriptor (Adabas only)
I	Input field
K	Key field
N	Non-database key field
P	Phonetic descriptor (Adabas only)

Abbreviation	Description
S	Super- or subdescriptor
U	User field
V	System variable
#	Dynamic input field

For further information on field types, see *Defining Fields*.

Position 3

An asterisk (*) in the third position indicates that the field is a multiple-value field or a periodic group.

Position 4

The numbers in the fourth position indicate the level of the field as follows:

Level No	Description
No number	Field not contained in a group or periodic group
2	Part of group or periodic group
3	Part of group within a group or periodic group

Examples

DB Column Content	Field Type Indicated
1_ _ _	Elementary field (primary file)
1K_ _	Elementary key field (primary file)
1_*_	Multiple-value field (primary file)
1_ _ 2	Elementary field in group (primary file)
1K _ 2	Key field in group (primary file)
2G*_	Periodic-group (secondary file)
2_ _3	Elementary field in group within group (secondary file)
1_ *3	Multiple-value field in group within group (primary file)
1G_ _	Group field (primary file)
1_*2	Multiple-value field in periodic-group (primary file)
1S_ _	Super- or subdescriptor (primary file)
2P_ _	Phonetic descriptor (secondary file)
L_ _ _	Elementary field (lookup file)

Field Name Column

Use the Field Name column to select the fields you want to use. As well as database fields you can use user fields, and system variables. If you are adding a transaction with the transaction mode Data Selection WORK FILE or PC FILE, you use input fields. The different types of fields are described in detail in the section *Fields*. System variables are described in detail in ***System Variables***.

Field Order

The fields which appear in the `Field Name` column are automatically sorted in order of their field references. Database fields are listed first, then user fields and then system variables.

Selecting Fields Directly

If you already know which database fields, input variables or system variables you want to use, you can select them directly.

To select fields directly

- Enter their names directly in the `Field Name` column.

Selecting Database Fields Using the Field Selection List Window

If you do not know which fields the file contains, or if you want to save on typing, you can invoke the Field Selection List window.

For further descriptions on the DB column, see ***Database Reference Column***

To select database fields using the Field Selection List window

1
```
15:50                      ***** Super Natural *****                2000-06-21
LIST                             - Worksheet -                         SN3011
                  !-------------------------------------------------------!
Ref DB    Field Name !                  Field Selection List              ↩
 !
AA  1K    PERSONNEL- !      Field Name                      Format DB    Info !
AE  1K 2  NAME ..... !   _  FULL-NAME                              1G    __ ↩
 !
AH  1     SEX ...... !   _  FIRST-NAME                       A20    1  2  __ ↩
 !
AI  1K    BIRTH .... !   _  MIDDLE-I                         A1     1  2  __ ↩
 !
AM  1K 2  CITY ..... !   _  MIDDLE-NAME                      A20    1     __ ↩
 !
BL        __________ !   _  MAR-STAT                         A1     1     __ ↩
 !
BM        __________ !   _  BIRTHP                           P6     1K    __ ↩
 !
BN        __________ !   _  FULL-ADDRESS                           1G    __ ↩
 !
BO        __________ !   _  ADDRESS-LINE                     A20    1 *2  __ ↩
 !
BP        __________ !   _  ZIP                              A10    1  2  __ ↩
 !
BQ        __________ !   _  POST-CODE                        A10    1  2  __ ↩
 !
BR        __________ !   _  COUNTRY                          A3     1  2  __ ↩
 !
BS        __________ !   _  TELEPHONE                              1G    __ ↩
 !
BT        __________ !   _  AREA-CODE                        A6     1  2  __ ↩
 !
                     !                                                    ↩
 !
                     ! More:   +                                          ↩
 !
                  !-------------------------------------------------------!
Command ===>
Enter-PF1---PF2---PF3---PF4---PF5---PF6---PF7---PF8---PF9---PF10--PF11--PF12---
      Help                          Flip          +                     Canc
4A¦                                                                 06,026
```

Enter an asterisk (*) in the first position of the Field Name column.

Or:

Issue the `FIELDS` command.

The Field Selection List window displays a list of all the fields contained in the file or files you are using apart from those already displayed in the Field Name column.

2 Mark the fields you require.

3 Press Enter.

The fields are transferred to the `Field Name` column.

Selecting All Fields

To select all the fields in the file(s) you are using

- Issue the `ALL` command.

The fields are entered in the `Field Name` column.

Selecting System Variables Using the Field Selection List Window

If you don't know which system variables Super Natural offers, or if you want to save on typing, you can invoke the Field Selection List window for system variables.

To select system variables using the Field Selection List window

1 Enter two asterisks (**) in the Field Name column.

The Field Selection List window for system variables appears.

The Field Selection List window for system variables displays a list of all the system variables available to you apart from those already displayed in the Field Name column.

2 Mark the system variables you require.

3 Press Enter.

The system variables are transferred to the `Field Name` column:

Note: System variables are described in detail in *System Variables*.

Defining User Fields and Dynamic Input Fields

To define a user field

1 Enter a unique name in the `Field Name` column.

The user field name can have a minimum of three characters and must not already exist in the file(s) you are using.

```
14:07                      ***** Super Natural *****                04.Jan.1998
SN3011                           - Worksheet -                          Monday
                                                                          ↩

Ref DB    Field Name     +-----------------Define User Field-----------------+
AE  1K 2  NAME .......... ! Field: USERFIELD1                                 ↩
!
AY  1K    DID-BUSINESS-CO !                                                   ↩
!
BA       userfield1_____ ! Name or value .. USERFIELD1_______________________ !
BB        _______________ ! Format ......... _                                ↩
!
BC        _______________ ! Length ......... ___                              ↩
!
BD        _______________ ! Dec. places .... _                                ↩
!
BE       _______________ ! Subfield of .... ________________________________ !
BF        _______________ ! Offset ......... ___                              ↩
!
BG        _______________ ! Dynamic input .. _                                ↩
!
BH        _______________ !                                                   ↩
!
BI       _______________ +---------------------------------------------------+
```

You can change the user field name in the `Name` or `Value` field as long as the field is not in use.

2 Change field name if required.

3 Enter the format of the field in the Format field.

4 Enter the length of the field in the Length field.

5 Enter the number of decimal places (numbers after the decimal point) the field should have in the Dec. Places field (numeric fields only).

6 If you want to make a user field out of all or part of an existing field, enter the name of that field in the `Subfield Of` field.

An example is shown below.

7 If you want the user field to use part of an existing field, enter the number of positions to skip before the new field starts in the `Offset` field.

To define a dynamic input field

1 Mark the `Dynamic Input` field if you want the field you are defining to be a dynamic input field.

For further information on dynamic input fields, see ***Defining Fields***.

2 Press Enter.

The user field or dynamic input field is defined.

Example of Subfield using Offset

For example, the field `BIRTH-DATE` in the file *E-SAG-TOURS-PERSON* is made up of eight digits: digits one, two, three and four indicate year of birth, digits five and six indicate month of birth, and digits seven and eight indicate day of birth:

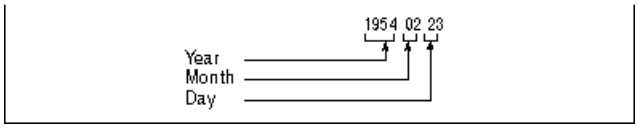

To define a new field called DAY OF MONTH

- Specify the following:

Field	Entry
Name or Value	DAY OF MONTH
Format	N
Length	4
Dec. Places	
Subfield of	BIRTH-DATE
Offset	4
Dynamic Input	

For further information on creating user fields, see *Sample 3: User Fields Calculation and Logical Conditions Editors* in the *Tutorial*.

Field Name Column and the Report Manager

When a layout is generated for a report, the system variables contained in the standard title appear in the `Field Name` column. The standard title supplied with Super Natural contains the system variables `*TIMX`, `*DATX`, `*PROGRAM` and `*PAGE-NUMBER` but your administrator may change this. If you delete the layout element title, the system variables still appear in the Field Name column but may be deleted.

Sequence Column

Use the Sequence (Seq) column to determine the following:

- Which fields are to be displayed when the transaction is run
- The order in which the fields are shown in a report (output sequence)
- Whether fields are to be displayed horizontally, vertically or as text

If you mark the Sequence column next to a group, all the fields belonging to the group already listed in the `Field Name` column are automatically numbered.

You must mark at least one field in the Sequence column in order to run or save the transaction.

You can number up to 99 fields in the Sequence column. If you want to display more than 99 fields, you can mark them with a column number and a sequence letter as described later in this section.

Note: If your report has Destination WORK FILE, PC FILE or USER FILE, the first 99 fields which are marked in the Sequencecolumn (whether marked with just a column number or with both a column number and a sequence letter) are written to file.

Note: For earlier versions: If you did not mark any fields in the Sequence column in Super Natural Version 2.4 or below, a record count was performed and the number of records which met the selection criteria was returned. You must now use the `COUNT` command to achieve this.

Horizontal Output - Column number

To display a field horizontally

- Mark it with a column number between 1 and 99.

  The field marked with the lowest number is displayed first, the field with the second lowest number second, etc. You can display up to 99 fields horizontally. The following is an example of horizontal output:

```
16:20:17  AA                                                        98-01-04
IHORIZ3                                                              10    ↩
                                                                           ↩
        CITY               SURNAME            FIRST-NAME-1     S           ↩
-------------------- -------------------- -------------------- -           ↩
                                                                           ↩
MADRID               MARTINEZ             ANTONIO              M           ↩
MADRID               MARTINEZ             MANUEL               M           ↩
MADRID               OSEA                 ROBERTO              M           ↩
MADRID               PINERO               PAULA                F           ↩
MADRID               PUERTOLAS            ANTONIO              M           ↩
MADRID               PUERTOLAS            MARIA JOSE           F           ↩
MADRID               RAMIREZ              FERNANDO             M           ↩
MADRID               SERRANO              ARTURO               M           ↩
MADRID               VILLAR               ANTONIO              M           ↩
MADRID               VIUDES               ANTONIO              M           ↩
MAILLY LE CAMP       GOIRAND              PHILIPPE             M           ↩
MANSFIELD            JAMIESON             SUSAN                F           ↩
MANSFIELD            SMITH                FRANK                M           ↩
MOLSHEIM             THIEBAULT            ROBERT               M           ↩
MUENCHEN             BACHMANN             HANS                 M           ↩
                                                                           ↩
Enter-PF1---PF2---PF3---PF4---PF5---PF6---PF7---PF8---PF9---PF10--PF11--PF12---
            Print Exit              Flip        +                       Canc ↩
```

Numbering All Fields in the Sequence Column

To number all the fields in the Sequence column

- Issue the `SEQUENCE` command.

  The first 99 fields are numbered in ascending order from the top of the Worksheet to the bottom of the last page.

Removing All Numbers from the Sequence Column

To remove all the numbers from the Sequence column

- Issue the `NOSEQUENCE` command.

Vertical Output - Column number and sequence letter

You can choose to display fields beneath each other in a column instead of next to each other in a row.

To display a field vertically

- Mark it with a column number (from 1 to 99) and a letter (from A to Z) to indicate the sequence within the column.

  If your report has Destination WORK FILE, PC FILE or USER FILE, the first 99 fields which are marked in the Sequence column (whether marked with just a column number or with both a column number and a sequence letter) are written to file.

  For example, to display both FIRST-NAME-1 and SURNAME (from SAG-TOURS-E-PERSON) in column two, enter 2A next to FIRST-NAME-1 and 2B next to SURNAME. To display CITY in column one, enter 1 or 1A next to the field CITY. The result is shown in the next figure.

```
16:18:12  AA                                                        98-01-04
IHORIZ3                                                              20    ↩
                                                                           ↩
        CITY               SURNAME        S                               ↩
-------------------- -------------------- -                               ↩
                                                                           ↩
MADRID               GARAICOECHEA         M                               ↩
                     LUIS                                                 ↩
MADRID               GOMEZ                F                               ↩
                     ISABEL                                               ↩
MADRID               MARTINEZ             M                               ↩
                     ANTONIO                                              ↩
MADRID               MARTINEZ             M                               ↩
                     MANUEL                                               ↩
MADRID               OSEA                 M                               ↩
                     ROBERTO                                              ↩
MADRID               PINERO               F                               ↩
                     PAULA                                                ↩
MADRID               PUERTOLAS            M                               ↩
                     ANTONIO                                              ↩
                                                                           ↩
                                                                           ↩
Enter-PF1---PF2---PF3---PF4---PF5---PF6---PF7---PF8---PF9---PF10--PF11--PF12---
            Print Exit              Flip        +                       Canc ↩
```

The first field selected for vertical display, in this case `SURNAME`, provides the header for the column in which the fields are printed.

If you want all the fields in each record to be displayed as a vertical list, use the report type VERTICAL LIST. For further information, see *Defining Transaction Modes for Reporting*.

Text Output - T and sequence number

To display a field as text

- Mark it with `T` and a sequence number.

  The field is displayed in a line of its own below the other fields in the record and without a header. You can have up to 99 text fields in a report. In the following, the field `SEX` is a text field:

```
16:21:56  AA                                                        98-01-04
IHORIZ3                                                              1     ↩
                                                                           ↩
        CITY                SURNAME            FIRST-NAME-1                ↩
-------------------- -------------------- --------------------             ↩
                                                                           ↩
AIX EN OTHE.         GODEFROY             ANNIE                           ↩
F                                                                          ↩
ALBERTSLUND          PLOUG                MICHAEL                         ↩
M                                                                          ↩
ALICANTE             FERNANDEZ            ZACARIAS                        ↩
M                                                                          ↩
ALICANTE             LLAGUNO              AMANDA                          ↩
F                                                                          ↩
ALICANTE             MARTINEZ             JESUS                           ↩
M                                                                          ↩
ARGENTEUIL           LEROUGE              MARC                            ↩
M                                                                          ↩
AUGSBURG             MOHN                 JAN                             ↩
M                                                                          ↩
                                                                           ↩
                                                                           ↩
Enter-PF1---PF2---PF3---PF4---PF5---PF6---PF7---PF8---PF9---PF10--PF11--PF12---
            Print Exit              Flip        +                       Canc ↩
```

Sequence Column and Natural Report Manager

When a layout exists for a report, the Sequence column is protected. If an L appears in the Sequence column next to a field it means that the field has been used in the Layout Editor. You can make no further entries in the Sequence column until both the layout elements list and header are deleted. When you have deleted the layout elements list and header, the entries you made in the Sequence column before invoking Natural Report Manager reappear.

Definitions made in the Layout Editor override those made in the Sequence column. For further information on the Layout Editor, see *Working with Natural Report Manager*.

Sort/Control Column

You use the Sort/Control (S/C) column to define sort fields and control fields. The sort level determines in which order the records found are sorted.

Sort Field

When you define a field as a sort field, the records found are sorted according to the field's alphabetical or numeric order (whether the field is displayed or not).

To define a sort field

- Enter an `S` next to it in the Sort/Control column.

Performance Note for Adabas Users

If the sort criteria consist of only key fields and no more than three key fields are specified, Super Natural invokes the Adabas sort feature instead of an operating system sort. Unless the number of values for a given key field is extremely large, an Adabas sort is more efficient than an operating system sort.

Control Field

When you define a field as a control field, the records found are sorted as for a sort field. In addition, you can define system functions which are calculated when the value or part of the value of the control field changes. For further information, see *Function Column*.

To define a control field

- Enter a `C` next to it in the Sort/Control column.

Sort Order

You can choose to display the records in ascending or descending order.

To define ascending order

- Enter A after the S or C.

To define descending order

- Enter D after the S or C.

  If you do not enter A or D, the records are displayed in ascending order.

Sort Level

The sort level determines the order in which the sorts for sort and control fields are performed. The sort with the lowest number is performed first.

To define the level of a sort

- Enter a number after the other entries in the Sort/Control column.

  You can have up to 9 sort levels.

```
16:24                      ***** Super Natural *****                1998-01-04
HORIZ3                           - Worksheet -                          SN3011
                                                                            ↩

Ref DB    Field Name                        Seq   S/C  Func Def  Info Del   ↩

AA  1K    PERSON-ID ......................  ___   ___   __   __   __   __   ↩

AC  1K    SEX ............................  T1_   ___   __   __   __   __   ↩

AE  1K 2  SURNAME ........................  2__   S2_   __   __   __   __   ↩

AF  1  2  FIRST-NAME-1 ...................  3__   S3_   __   __   __   __   ↩

AH  1  2  TITLE ..........................  ___   ___   __   __   __   __   ↩

AO  1K 2  CITY ...........................  1__   S1_   __   __   __   __   ↩

BI        ________________________________  ___   ___   __   __   __   __   ↩

BJ        ________________________________  ___   ___   __   __   __   __   ↩

BK        ________________________________  ___   ___   __   __   __   __   ↩

BL        ________________________________  ___   ___   __   __   __   __   ↩

BM        ________________________________  ___   ___   __   __   __   __   ↩

BN        ________________________________  ___   ___   __   __   __   __   ↩

BO        ________________________________  ___   ___   __   __   __   __   ↩

BP        ________________________________  ___   ___   __   __   __   __   ↩

                                                                            ↩

                                                                            ↩

Transaction HORIZ3 successfully executed                                    ↩

Command ===>                                                                ↩

Enter-PF1---PF2---PF3---PF4---PF5---PF6---PF7---PF8---PF9---PF10--PF11--PF12---
      Help  Next  Exit  Incl        Flip  -     +           Sel   Run   Canc ↩
```

Option Column

The Option (Opt) column only appears for data maintenance transactions of the type ADD, UPDATE SINGLE and UPDATE MULTIPLE and is described in the section *Data Maintenance*.

Function Column

Defining System Functions at Control Breaks

`System functions (SF) / (Func)` are statistical functions available at control breaks. A control break occurs when the value of the control field changes.

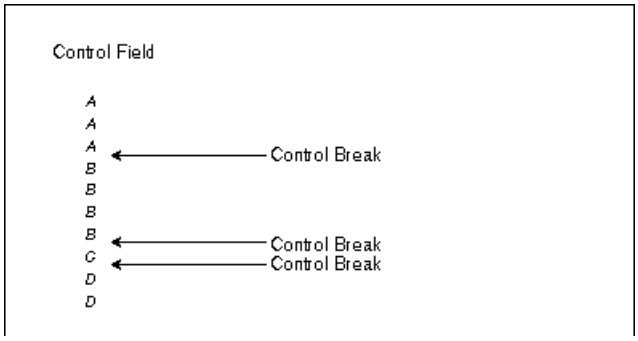

Using system functions, you can calculate the total, sum, average value, minimum value and maximum value of the field specified and display the number of records found between control breaks. You can choose to ignore fields which contain the value zero when you calculate average, minimum and count. You can specify system functions either for the control field itself or for any other field when the value of the control field changes. You can also specify system functions at the Grand level where the values of the fields in all the records found are used.

```
Control Field

    A
    A
    A
    Count: 3        <------------- System Function

    B
    B
    B
    B
    Count: 4        <------------- System Function

    C
    Count: 1        <------------- System Function

    D
    D
    Count: 2

    Grand Total:    <------------- Grand Total
    Count: 10
```

```
Control Field        Other Field

    A                23
    A                42
    A                36
    Minimum:         23    <------------- System Function

    B                57
    B                34
    B                67
    B                12
    Minimum:         12    <------------- System Function

    C                34
    Minimum:         34

    D                34
    D                45
    Minimum:         34    <------------- System Function

    Grand Total:           <------------- Grand Total
    Average:         38.4
```

To define system functions

1 Enter `SF` in the Function column next to the field for which you want to calculate statistics at a control break.

The Specify System Functions window appears as in the following example:

```
15:10                      ***** Super Natural *****                04.Jan.1998
SN3011                           - Worksheet -                          Monday
                                                                            ↩

+-------------------------Specify System Functions--------------------------+
! Field: MOTOR                                                              ↩
!
!                                                                  N   N   N ↩
!
! Level  Control Field                    Cnt Tot Sum Avg Max Min Cnt Avg Min !
! Grand  End of Report                     _   _   _   _   _   _   _   _   _ ↩
!
!     1  ID-CH-BASE                        _   _   _   _   _   _   _   _   _ ↩
!
!                                          _   _   _   _   _   _   _   _   _ ↩
!
!                                          _   _   _   _   _   _   _   _   _ ↩
!
!                                          _   _   _   _   _   _   _   _   _ ↩
!
!                                          _   _   _   _   _   _   _   _   _ ↩
!
!                                          _   _   _   _   _   _   _   _   _ ↩
!
!                                          _   _   _   _   _   _   _   _   _ ↩
!
!                                          _   _   _   _   _   _   _   _   _ ↩
!
!                                          _   _   _   _   _   _   _   _   _ ↩
!
!                                                                            ↩
!
+---------------------------------------------------------------------------+
```

The Specify System Functions window contains the following fields and columns:

Field/Column	Description
Field	The name of the field about which statistical information is to be given.
Level and Control Field	The first entries in these columns are always GRAND and End of Report. You can choose a system function which uses the values of the fields in all the records found and displays the result at the end of the report. Further entries show which fields are defined as control fields and at which level.
CNT (Count)	You can mark the Count column to display the number of records found between control breaks.
TOT (Total)	You can mark the Total column to display the cumulative sum of the field values across all control breaks up to the present one.

Field/Column	Description
SUM	You can mark the Sum column if you want to know the sum of the values of a field between control breaks.
MIN (Minimum)	You can mark the Minimum column to display the minimum field value between control breaks.
MAX (Maximum)	You can mark the Maximum column to display the maximum field value between control breaks.
AVE (Average)	You can mark the Average column to display the average field value between control breaks.
N CNT (Null Count)	You can mark the Count column to display the number of records found between control breaks. Null values are ignored.
N AVE (Null Average)	You can mark the Average column to display the average field value between control breaks. Null values are ignored.
N MIN (Null Minimum)	You can mark the Minimum column to display the minimum field value between control breaks. Null values are ignored.
OLD	Only available in Natural Report Manager via the Extended Field Editing window. This system function displays the value of the field prior to a control break.

Note: Null values are zero for numeric fields and blank for alphanumeric fields.

Columns which are not relevant to the field type you have chosen are protected.

2 Make your entries in the Specify System Functions window.

Note: If you only want report data to be output after each control break, use the transaction mode Report Level SUMMARY. For further information, see *Defining Transaction Modes for Reporting*.

The following screen is part of the report generated by the sample transaction SAMPLE2 which is described in the *Tutorial*:

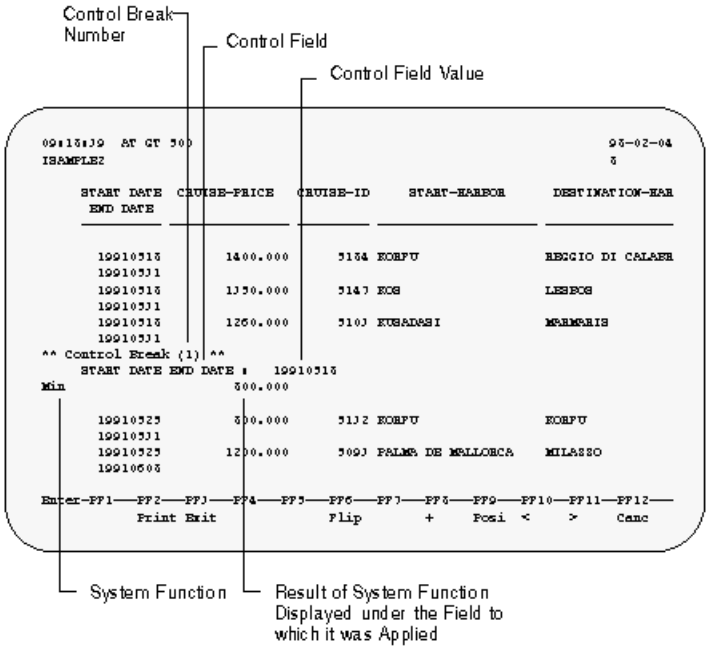

Interfield Arithmetic

The *Interfield Arithmetic (IA)* feature is recommended only for users of previous versions of Super Natural.

You can also use the Function column to perform arithmetic calculations using interfield arithmetic.

To define interfield arithmetic

1 Enter `IA` in the Function column next to a field you want to use in a calculation.

The Interfield Arithmetic window appears:

```
16:32                      ***** Super Natural *****                1998-01-04
EXA2                             - Worksheet -                          SN3011
                                                                            ↩

Ref DB    Field Name              +----------Inter-Field Arithmetic----------+
AB  1K    YACHT-NAME ............ ! Field: BUNKS                             ↩
!
AD  1K    ID-CH-BASE ............ !                                          ↩
!
AJ  1     DRAFT .................. ! Used to define arithmetic calculations. ↩
!
AN  1     BUNKS .................. !                                          ↩
!
AQ       _________________________ ! The operators '+,*,-,/,=' are available. !
AR        _________________________ ! Up to 10 separate calculations can be   ↩
!
AS        _________________________ ! indicated (number 0 through 9).         ↩
!
AT        _________________________ !                                          ↩
!
AU        _________________________ ! Enter arithmetic expression: ______     ↩
!
AV        _________________________ !                                          ↩
!
AW       _________________________ +-----------------------------------------+
AX        ___________________________________   ___   ___   __   __   __   __   ↩
```

2 Enter the operator which you want to act on the field.

The arithmetic operators +, *, - and / are available.

3 Repeat the above two steps for as many operators and operands as necessary.

4 Enter `IA` in the Function column next to the field you want to be the result field.

The result field can either be a database field or a user field and can already have been defined as an operand.

5 Enter an equals sign (=) in the Interfield Arithmetic window.

The result field must be defined before you use it in a calculation. For information on how to define a user field, see *Defining User Fields and Dynamic Input Fields*.

Example:

The following table shows what you must enter in the Interfield Arithmetic window to add the field XXX to the field YYY with the result being placed in the field YYY:

FieldEntry in Interfield Arithmetic window

XXX +

YYY +=

Multiple Calculations

You can indicate up to ten separate calculations. If you enter more than one calculation, you must identify each one with a number (from 0 through 9) following the operator.

Example:

The following table shows what you must enter in the Interfield Arithmetic window to perform the following calculations:

```
XXX + YYY = YYY     (calculation 1)
AAA - (BBB * XXX) = CCC   (calculation 2)
```

Field Entry in Interfield Arithmetic window

XXX +1*2

YYY +1=1

AAA +2

BBB -2

CCC =2

Special Break Conditions

Using special break conditions (CB), you can make control breaks occur when the first n characters in the control field change. For example, you may want a control break to occur each time the first two characters of the field `YACHT-NAME` change.

To define special break conditions

1 Enter `CB` in the Function column next to a control break field.

The Special Break Conditions window appears as in the following example:

```
16:32                      ***** Super Natural *****                1998-01-04
EXA2                             - Worksheet -                          SN3011
                                                                            ↩

Ref DB    Field Name             +---------Special Break Conditions----------+
AB  1K    YACHT-NAME ............ ! Field: YACHT-NAME                        ↩
!
AD  1K    ID-CH-BASE ............ !                                          ↩
!
AJ  1     DRAFT ................. ! Format .. A                              ↩
!
AN  1     BUNKS ................. ! Length .. 30                             ↩
!
AQ        _________________________ !                                         ↩
!
AR       __________________________ ! Perform control break after change of the !
AS        _________________________ ! first 'n' field characters.              ↩
!
AT        _________________________ ! Do not enter any value if the complete   ↩
!
AU        _________________________ ! length should be taken.                 ↩
!
AV        _________________________ !                                         ↩
!
AW        _________________________ ! First 'n' characters: __                ↩
!
AX        _________________________ !                                         ↩
!
AY       __________________________ +-----------------------------------------+
```

2 Specify the number of characters which must change before a control break occurs.

Field Definition Column

Use the Field Definition (Def) column to change the output definition of any field or the field definition of a user field.

Output Definition

Output definition (OD) determines how a field should be displayed in a report.

To change a field's output definition

- Enter `OD` next to it in the Field Definition column.

  The Define Field Output window appears as in the following example:

```
16:35                      ***** Super Natural *****                1998-01-04
EXA2                             - Worksheet -                          SN3011
                                                                            ↩

Ref DB    Field Na +-------------------Define Field Output--------------------+
AB  1K    YACHT-NA ! Field: YACHT-NAME                                        ↩
!
AD  1K    ID-CH-BA !                                                          ↩
!
AJ  1     DRAFT .. ! Format/Length ....... A30                                ↩
!
AN  1     BUNKS .. ! Numeric sign ........ _ (Y/N)                            ↩
!
AQ        ________ ! Output length ....... 30_                                ↩
!
AR        ________ !        dec. places .. _                                  ↩
!
AS        ________ ! Heading ............. ______________________________    ↩
!
AT        ________ !                      ______________________________    ↩
!
AU        ________ !                      ______________________________    ↩
!
AV        ________ ! Edit mask                                                ↩
!
AW       ________ !   ___________________________________________________ !
AX        ________ ! Suppress identical values .. _ (Y/N)                    ↩
!
AY        ________ ! Print zero values .......... _ (Y/N)                    ↩
!
AZ        ________ ! Occurrences (1)  ___ : ___  (2)  ___ : ___              ↩
!
                   !                                                          ↩
!
                  +-----------------------------------------------------------+
                                                                            ↩
```

Note: Modifications made in this windows apply to the field output only, and not to the actual field definition or contents.

The Define Field Output window contains the following fields:

Field	Description
Fieldname	You may not modify the name of a database field. Once a user field has been used, you cannot change its name and format.
Format/Length	You may not modify the length/format of a database field.
Numeric Sign (numeric formats only)	If you enter Y, a sign position is reserved for the field and the character - is printed before each negative value of the field. An entry made for this field may be modified in the layout editor.
Output Length	Use this field to determine the number of positions to appear in the report. For numeric fields, this is the number of positions left of the decimal point.
Dec. Places (numeric formats only)	Use this field to determine the number of positions to the right of the decimal point to appear in the report.
Heading	Use this field to define which heading is to appear above the field in the report you are creating. If you leave this field blank, the field name is used.
Edit Mask	You can enter any valid Natural edit mask here. Edit masks defined here have priority over other entries in this window. If this field already contains an edit mask, you can overwrite it. You can use this field to define leading, floating and trailing characters. For further information on edit masks, see ***Edit Masks***. The online help for this field gives you examples of edit masks and possible resulting output.
Suppress Identical Values	If you specify Y, identical values for the field are suppressed.
Print Zero Values (numeric formats only)	If you enter N, the field value is printed as blanks if the value is zero.
Occurrences	Use this field to define the maximum number of occurrences (i.e., values) to be displayed for multiple-value fields and fields that are contained in a periodic group. For multiple-value fields which are contained in a periodic group, the entry for (1) applies to the periodic group and the entry for (2) applies to the multiple-value field. If it is only a multiple-value field, the entry for (1) applies.

Field Definition

The `Field Definition (FD)` option is only available for user fields which have not yet been used. The Define User Field window appears as described in *Defining User Fields and Dynamic Input Fields*.

Information (Info) Column

Use the Information column to obtain information about field attributes, values for key fields, field usage and dictionary information.

Field Attributes

Field Attributes (AT) information tells you how the field is defined in the database.

Dictionary Information

Dictionary information (PI) gives you first comments if available and then an extended field description from the data dictionary Predict. This feature is only available at sites where Predict is installed.

Values for Key Fields

You can use the `Values for Key Fields (VA)` function to obtain a list showing how many records contain values within a certain range for a certain field.

You can only use the `Value for Key Fields` function with key fields.

When you select the `Values for Key Fields` function, the Values window appears in which you can define the range of values you want to see. When you press Enter, you are shown the values present, the number of records which contain each value and the total number of values found.

To print Values for Key Fields information

- Issue the `PRINT` command when the Values window is displayed.

Field Usage Information

Field usage (US) information tells you where the field in question is used in your transaction e.g. as a sort field, or in the Selection editor, or in SQL statements. This information is particularly useful when you want to delete a field from the field list.

Delete Column

Use the Delete (Del) column to delete fields from the `Field Name` column on the Worksheet.

Deleting Fields from the Field Name Column

To delete a field from the Field Name column

- Enter `D` in the Delete column.

  You can only delete a field if it has not been used. If a field has been used in any way, e.g. as a sort field, in the Selection editor or in SQL statements, the Delete column is protected.

To obtain information on where a field has been used

- Use the `Information` function.

Returning Deleted Fields to the Field Name Column

You can return deleted fields to the `Field Name` column in several ways.

To return deleted fields to the Field Name column

- Invoke the Field Selection List window which lists the fields not yet used and reselect the field.

  Or:

  Enter the field name or reference directly in the Field Name column.

  Or:

  Use the field name or reference in any of the editors.

  The field reappears in the Field Namecolumn.

Commands Available from the Worksheet

The following commands are specific to the Worksheet:

Note: For a list of the default PF key functions, see *Using Super Natural*.

Note: For a list of commands available from within transactions, see *Using Reporting Transactions*.

Command (Abbreviation)	Description
ALL (AL)	Selects all the fields contained in the file(s) you are using and enters them in the Field Name column of the Worksheet.
FIELDS (FIE)	Invokes the Field Selection List window (also available from the Selection, Calculation and Logical Conditions Editors).
NOSEQUENCE (NOS)	Removes all numbers from the Sequence column in the Worksheet.
PRINT (PRI)	Prints the information found by the `Value` function (also available for printing reports and transaction and user file information).
SEQUENCE (SEQ)	Gives each field entered in the Field Name column a number in the Sequence column. Fields are numbered in ascending order from the top of the Worksheet to the bottom of the last page.
TRANSACTION (TR)	Invokes the List Transaction screen (also available from the Menu and Object List screens).

7 Using a Database Structure

- What is a Database? 104
- Accessing Data UsingSuper Natural 105

This section gives a basic overview of database structure and accessing data using Super Natural.

This section covers the following topics:

- **What is a Database?**
- **Accessing Data Using Super Natural**

What is a Database?

A database is a collection of data. The data within a database is stored in files.

Files are groups of related data stored together and treated as one unit, for example, all the information about pricing is held in the demonstration file *SAG-TOURS-E-PRICES*. The data within a file is stored in records.

Records are smaller sets of related data treated as a unit for example, all the information about a particular company in the demonstration file *SAG-TOURS-E-COMPANY*. The data within a record is organized into fields.

Fields contain the values which you are interested in.

The diagram below gives an overview of database structure:

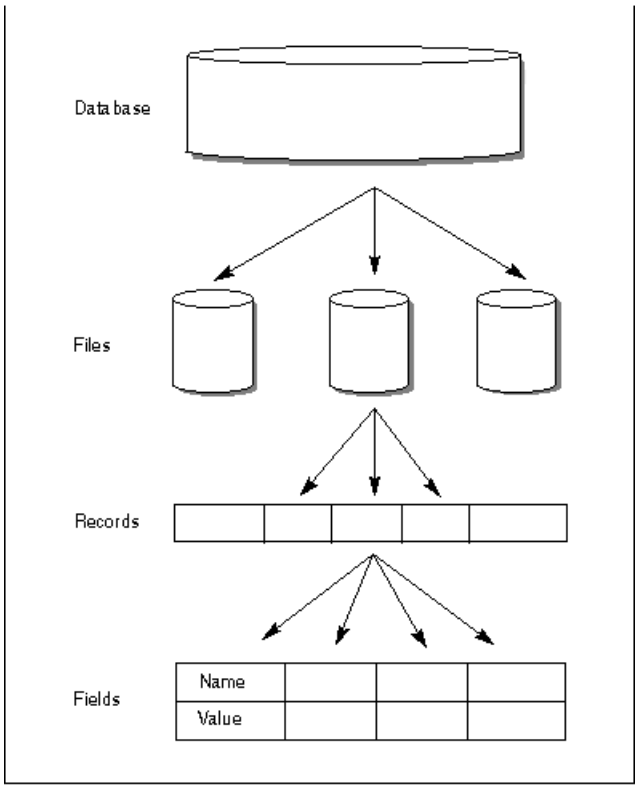

Accessing Data UsingSuper Natural

Natural is a language which a programmer can use to access the data stored in the database. Super Natural is a Natural application or collection of programs written in Natural.Super Naturalpresents the end-user with an interface which allows him to choose what he wants to do with the data stored in the database. According to the entries the user makes, Super Natural generates the Natural programs which can access the database and extract the data required.

8 Defining Files

- What are Files? 108
- Using More Than One File - The INCLUDE Command 109
- What is File Linking? 117
- What is File Lookup? 119
- Superfiles 123
- Extended File Descriptions and File Comments 124

This section covers the following topics:

- What are Files?
- Using More Than One File (The Command)
- What is File Linking?
- What is File Lookup?
- Superfiles
- Extended File Descriptions and File Comments

What are Files?

Files are groups of data stored together and treated as one unit. Files contain records which in turn contain fields. The diagram below gives an overview of file structure:

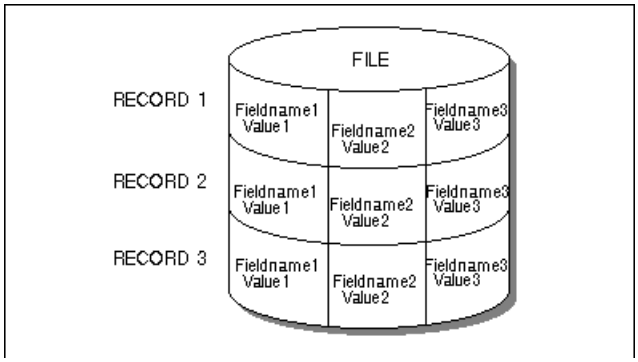

File Types Used By Super Natural

Super Natural can access the following types of files:

Database Files

The data stored in a database is grouped together in files. Database files are defined by the database administrator. Only users who are authorized to use data maintenance transactions can alter the contents of database files.

The following demonstration files are supplied with Super Natural so you can reproduce the examples shown in this documentation:

- SAG-TOURS-E-CH-PRICES
- SAG-TOURS-E-COMPANY
- SAG-TOURS-E-CONTRACT

- SAG-TOURS-E-CRUISE
- SAG-TOURS-E-PERSON
- SAG-TOURS-E-YACHT

User Files

User files are defined by users. Only the creator and the administrator can perform maintenance on a user file. For more information on user files, see ***Working with User Files***.

PC Files

PC files are sequential files stored in a PC. You can read data from and write data to a PC file using the transaction modes Data Selection PC FILE and Destination PC FILE respectively.

Work Files

Work files are sequential files stored in the mainframe database. You can read data from and write data to a work file using the transaction modes Data Selection WORK FILE and Destination WORK FILE respectively.

Superfiles

Superfiles are a special type of file and are described later in this section.

Using More Than One File - The INCLUDE Command

If you want to use fields from more than one files you can use the `INCLUDE` command from any point within a transaction to define a link to a secondary file, file lookups, and the order in which file lookups are to be processed.

Sections later in this section give detailed technical information on what actually happens when you link files and perform file lookups. The sample transactions SAMPLE6 and SAMPLE7 described in the *Tutorial* give examples of file linking and file lookup.

To include other files in a transaction

- Issue the `INCLUDE` command.

  The Include Files window appears:

```
17:55                      ***** Super Natural *****            04.Jan.1998
SN3011                           - Worksheet -                       Monday

Ref DB  Field Name   +--------------------Include Files--------------------+
AA 1K  YACHT-ID .... !                                                     !
AB 1K  YACHT-NAME .. ! Primary File ..... SAG-TOURS-E-CRUISE_______________ !
AC 1   YACHT-BRANCH  ! Secondary File ... ________________________________ !
AD 1K  ID-CH-BASE .. !                                                     !
AE 1K  ID-S-OWNER .. ! Add Lookup File .. ________________________________ !
AF 1K  DID-DESCRIPTI ! Process Lookups .. _                                !
AG 1K  YACHT-TYPE .. !                                                     !
AH 1   LENGTH ...... +-------------------------------------------------------+
```

From the Include Files window, you can do the following:

- Redefine the primary file
- Define file link
- Define one or more file lookups
- Process lookups

Redefining the Primary File

The `Primary File` field in the Include Files window shows which file you have defined as your primary file. If no fields from the primary file are in use, you can enter another file name here, otherwise the field is protected.

Linking Files

The file to which you link the primary file is known as the secondary file.

To link the primary file to another file

- Enter the name of the secondary file in the `Secondary File` field in the Include Files window.

  The Define File Link window appears as in the following example:

```
17:31                      ***** Super Natural *****                1998-05-13
SAMPLE6                          - Worksheet -                          SN3011
                                                                            ↩

Ref DB    Field Name    +--------------- +----------Define File Link----------+
BE         _____________ !                !                                    ↩
!
BF         _____________ ! Primary File . ! Primary File                       ↩
!
BG         _____________ ! Secondary File !   SAG-TOURS-E-CRUISE               ↩
!
BH         _____________ !                ! Link field in primary file        ↩
!
BI        _____________ ! Add Lookup Fil !   id-yacht_________________________ !
BJ         _____________ ! Process Lookup ! From position .. ...               ↩
!
BK         _____________ !                !   to position .. ...               ↩
!
BL         _____________ +--------------- !                                    ↩
!
BM         ______________________________ ! Secondary File                     ↩
!
BN         ______________________________ !   SAG-TOURS-E-YACHT               ↩
!
BO         ______________________________ ! Link field in secondary file      ↩
!
BP        _______________________________ !   yacht-id_______________________ !
BQ         ______________________________ !                                    ↩
!
BR        _______________________________ +-----------------------------------+
```

To specify the Primary File

1 Type the name of the link field in the primary file in the `Link Field In Primary File` field. The `Primary File` field shows the name of the primary file.

   Or:

   Enter an asterisk (`*`) in the `Primary File Link` field to obtain the Field Selection List window if you do not know the exact field name.

   The fields which already appear in theFieldname column of the Worksheet are listed first.

2 Mark the required field.

3 Press Enter.

   The field name appears in the `Link Field In Primary File` field.

To specify the Position

1 Enter the position number of the first part of the field you want to use in the `From Position` field.

2 Enter the position number of the last part of the field you want to use in the `To Position` field.

   You can also just use a part of the field in the primary file for linking purposes (optional). For example, you may want to use the values in the second, third and fourth positions of the field.

To specify the Secondary File

1 Enter the name of the link field from the secondary file in the `Link Field In Secondary File` field. The `Secondary File` field shows the name of the secondary file.

   If you have already defined a secondary file, the `Secondary File` field in the Include Files window shows which file you have defined. If no fields from the secondary file are in use, you can enter another file name here, otherwise the field is protected.

   Or:

   Enter an asterisk (`*`) to obtain a list of the fields you may use.

   Only fields with the same format as the primary file link field are listed.

   The link field in the secondary file must have a logical connection with the primary file link field. If the link field in the secondary file is longer than the link field in the primary file, all records in the secondary file which begin with the value of the primary file link field will be selected.

2 Mark the required field.

3 Press Enter.

   The field name appears in the `Link Field In Secondary File` field.

4 When you have completed your entries in the Define File Link window, press Enter.

   The Include Files window reappears.

Adding File Lookups

The file in which you want to look up data is known as the lookup file.

To perform a lookup to another file

1 Enter the name of the lookup file in the `Add Lookup File` field in the Include Files window.

The Define File Lookup window appears:

```
11:07                      ***** Super Natural *****                05.Jan.1998
SN3011                           - Worksheet -                          Tuesday
                                                                              ↩

Ref DB    Field Name    +- +----------------Define File Lookup----------------+
AA  1K     YACHT-ID .... !  !                                                  ↩
!
AB  1K     YACHT-NAME .. !  ! Lookup link field                                ↩
!
AC  1      YACHT-BRANCH  !  !   ________________________________               ↩
!
AD  1K     ID-CH-BASE .. !  ! Lookup File                                      ↩
!
AE  1K     ID-S-OWNER .. !  !   SAG-TOURS-E-CONTRACT                           ↩
!
AF  1K     DID-DESCRIPTI !  ! Lookup field in lookup file                      ↩
!
AG  1K     YACHT-TYPE .. !  !   ________________________________               ↩
!
AH  1      LENGTH ...... +- !                                                  ↩
!
AI  1      WIDTH .......... ! Lookup (1:1) ...................... Y   (Y/N)   ↩
!
AJ  1      DRAFT .......... !   or enter N for lookup (1:n)                    ↩
!
AK  1      SAIL-SURFACE ... ! Process even if no records found .. Y   (Y/N)   ↩
!
AL  1     MOTOR ........... ! Search position ..................   3 (3 - 99) !
AM  1      HEAD-ROOM ...... !                                                  ↩
!
AN  1      BUNKS .......... ! Select lookup display fields ...... X           ↩
!
                            !                                                  ↩
!
                          +--------------------------------------------------+
```

2 Enter the name of the field in the primary file (or secondary file if one is defined) via which you want to perform the file lookup in the `Lookup Link Field` field.

Or:

Enter an asterisk (*) to obtain a list of the fields you may use.

The fields which already appear in the Fieldname column of the Worksheet are listed first.

3 Enter the name of the field in the lookup file via which you want to perform the file lookup in the `Lookup Link Field` field.

Or:

Enter an asterisk (*) to obtain a list of the fields you may use.

Only fields with the same format as the lookup field in the primary or secondary file are listed.

The lookup field in the primary or secondary file must have a logical connection with the lookup field in the lookup file.

4 Mark the required field.

5 Press Enter.

The field name appears in the `Lookup Link Field` field.

To specify the Lookup (1:1)

- Enter N in the `Lookup (1:1)` field to perform a lookup (1:n).

  The default lookup type is (1:1), but you can also perform a lookup of the type (1:n)

To process Even If No Records Found

- Enter N in the `Process Even If No Records Found` field to break off processing of the lookup file if no records are found.

  By default, lookup processing takes place even if no records are found in the lookup file. You can choose to break off processing of the lookup file if no records are found. This means that only the records in the primary file for which a record with a corresponding link field value is found in the lookup file are available.

To Search Position

- Enter another number (from 3 - 99) in the `Search Position` field if you want to change the default search position.

  The search position determines the order in which lookups are processed. The significance of this option is explained in the section *What is File Lookup*. The default search position is 3 for the first lookup you define, 4 for the second etc.

To Select Lookup Display Fields

1 Enter any non-blank character in the `Select Lookup Display` Fields.

   You can define which fields from the lookup file you want to display in the report. A window containing a selection list of the fields in the lookup file which you may display appears.

2 Mark the fields you want to display.

3 Press Enter.

   You are returned to the Define File Lookup/Link window.

4 When you have finished making your entries in the Define File Lookup/Link window, press Enter.

   You are returned to the Include Files window. The number of lookup files currently defined is shown next to the `Process Lookups` field.

Processing File Lookups

The number after the `Process Lookups` field in the Include Files window indicates how many file lookups have been defined for the current transaction. If no lookups have been defined, the `Process Lookups` field is protected.

To obtain a list of the lookup files currently in use

- Mark the `Process Lookups` field with any non-blank character.

  The Defined Lookup Files window appears as in the following example:

```
13:20                      ***** Super Natural *****                05.Jan.1998
SN3011                           - Worksheet -                          Tuesday
                                                                              ↩

Ref DB    Field Name    +------ +------------Defined Lookup Files-------------+
AA  1K     YACHT-ID .... !       !                                              ↩
!
AB  1K     YACHT-NAME .. ! Prima !  Cmd  Lookup File                      Seq !
AC  1      YACHT-BRANCH  ! Secon !   __  SAG-TOURS-E-CONTRACT               3 ↩
!
AD  1K     ID-CH-BASE .. !       !   __                                       ↩
!
AE  1K     ID-S-OWNER .. ! Add L !   __                                       ↩
!
AF  1K     DID-DESCRIPTI ! Proce !   __                                       ↩
!
AG  1K     YACHT-TYPE .. !       !   __                                       ↩
!
AH  1      LENGTH ...... +------ !   __                                       ↩
!
AI  1      WIDTH ............... !   __                                       ↩
!
AJ  1      DRAFT ............... !   __                                       ↩
!
AK  1      SAIL-SURFACE ........ !   __                                       ↩
!
AL  1      MOTOR ............... !   __                                       ↩
!
AM  1      HEAD-ROOM ........... !                                            ↩
!
AN  1     BUNKS ............... +---------------------------------------------+
                                                                              ↩
```

You can either modify or delete the definitions for each lookup file.

To modify the lookup definition for a lookup file

- Enter the command abbreviation `MO` in the command column next it.

  The Define File/Lookup Link window appears where you can redefine the lookup. The names of the lookup fields in both the lookup file and the primary or secondary file are replaced with the field references.

  You cannot change the lookup fields or lookup file.

To delete the lookup definitions for a file

- Enter the command abbreviation `DE` in the command column next to it.

  With Super Natural Version 3.1.1, you can use fields as lookup fields more than once. If you do this, you cannot subsequently change the search sequence.

What is File Linking?

The section *Sample 6: File Link* in the *Tutorial* gives an example of a transaction using file link.

When you link files, Super Natural generates a search on two levels when the transaction is run.

1. A search is made of the primary file for all records which meet the selection criteria. A set of records is found as in the following example:

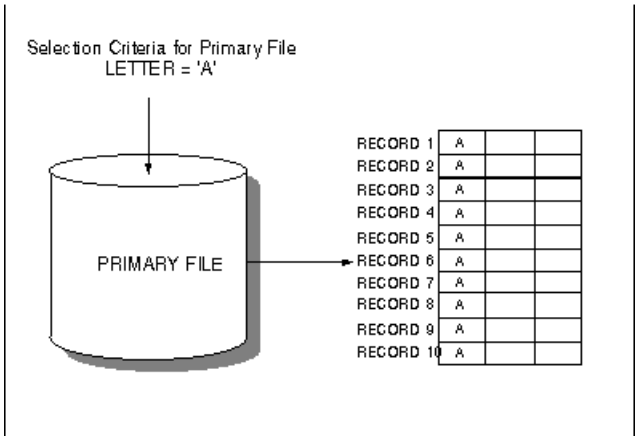

In this example, `LETTER` is a field in the primary file and `NUMBER` is a field in the secondary file.

1. When a record is found in the primary file, Super Natural takes the value of its link field and searches the secondary file for *all* records whose link field has the same value:

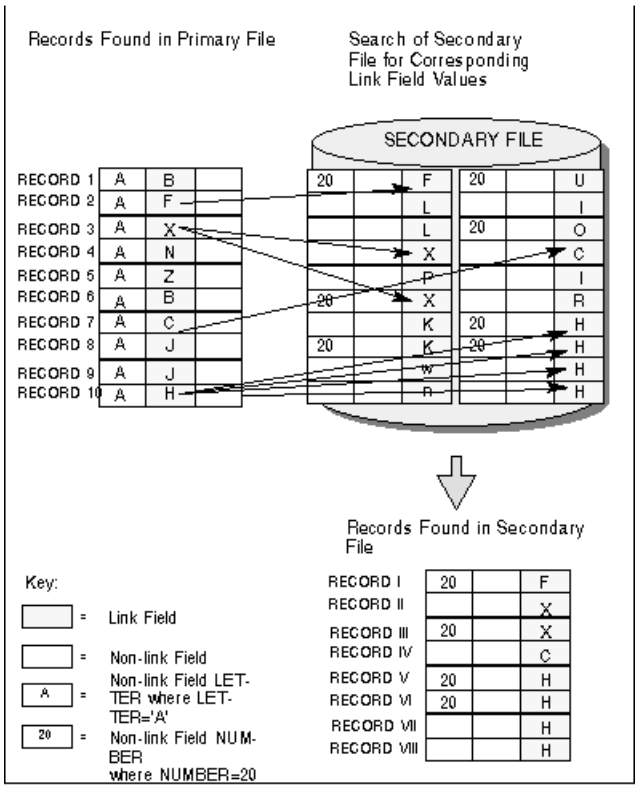

When the records from the primary and secondary files are joined via the link field, any selection criteria using fields from the secondary file are applied.

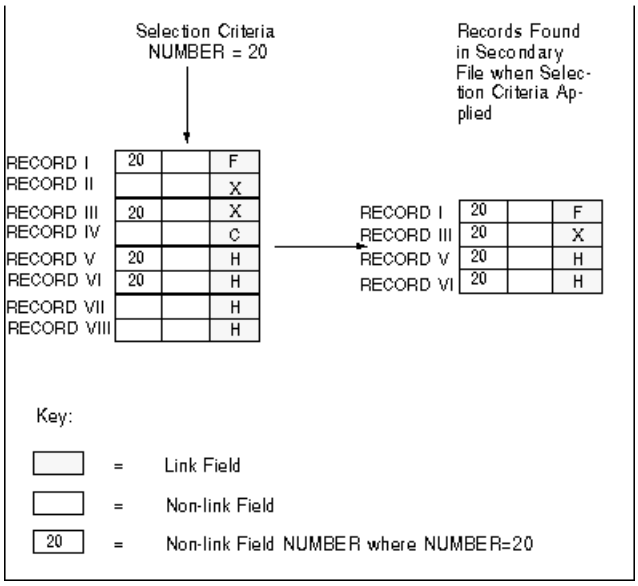

1. The records found in the primary file and the records in the secondary file with a corresponding link field value which also fulfil the selection criteria are returned:

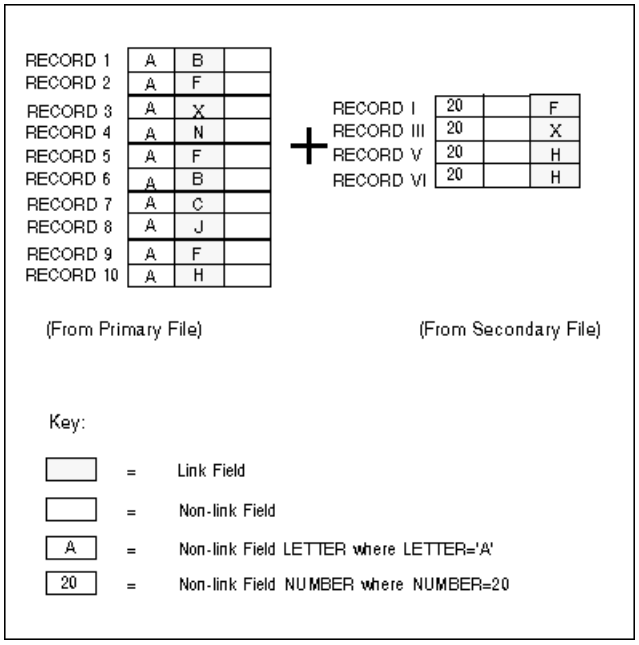

What is File Lookup?

The *Sample 7: File Lookup* in the *Tutorial* gives an example of a transaction using file lookup.

There are two types of file lookup:

- Lookup 1:1
- Lookup 1:n

The lookup link field can be one of the following:

- Field in the primary file
- Field in the secondary file
- Field in a lookup file
- User field

The `Lookup Link` field is used to provide the link between the file in which it is contained and the lookup file via the `Lookup` field. The `Lookup Link` field and lookup field must be of like format and represent a logical relationship.

Fields contained in lookup files cannot be used as further selection criteria. However, you can use fields from the lookup file with the `ACCEPT` and `REJECT` keywords in a THEN clause in the Logical Conditions Editor.

You can define multiple lookups using more than one link field, but you can only access one file per link field.

Lookup

When performing a file lookup (1:1), the relationship between link field and records returned can be expressed by the ratio (1:1). This means that if the link field has the same value for *n* records in the lookup file, only the first record found is returned for the report.

Only one record from the lookup file can be returned for each record in the primary file.

When you perform a file lookup (1:1), Super Natural generates a multiple-level search when the transaction is run: a two-level search if you are only using a primary file, or a three-level search if you are using both a primary and a secondary file.

Lookup from Primary File

When you run a transaction using a primary file and a lookup file (lookup 1:1), the following takes place:

1. Super Natural searches the primary file for records that meet the selection criteria you have specified. A set of records is selected as in the following example:

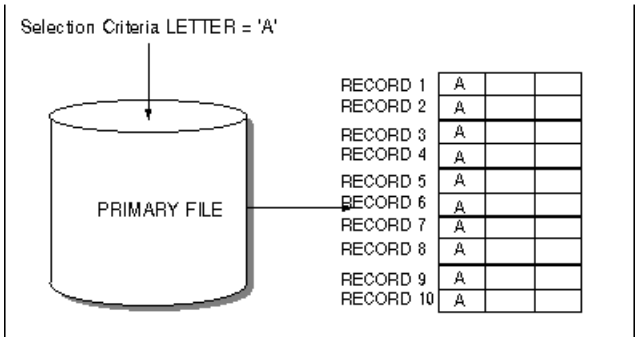

1. When a record is found in the primary file, Super Natural takes the value of its lookup link field and searches the lookup file for *the first* record whose lookup field has the same value.

The diagram on the following page shows an example of a lookup file search.

Compare this diagram with the diagram File Link Processing - Secondary File Search in the section *What is File Linking* earlier in this section.

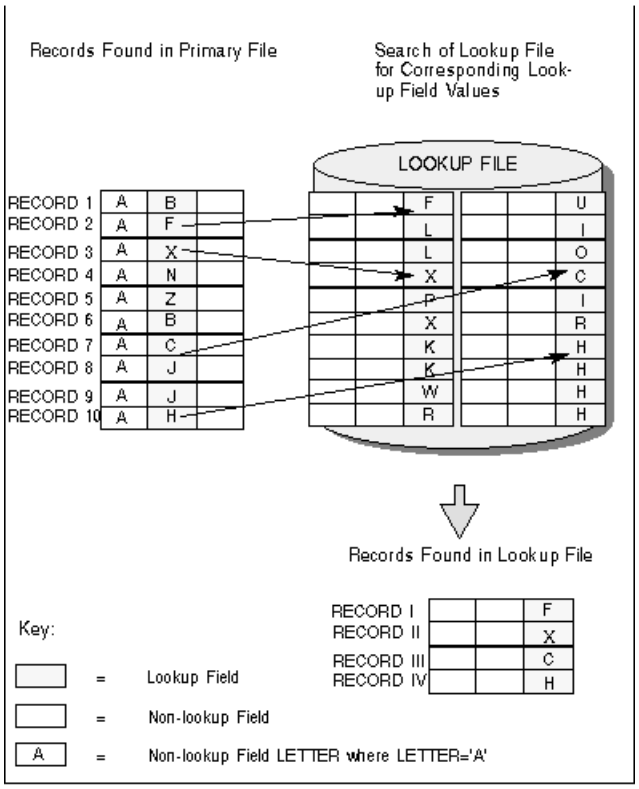

1. The records found in the primary file and the records in the lookup file are returned and can be displayed in the report:

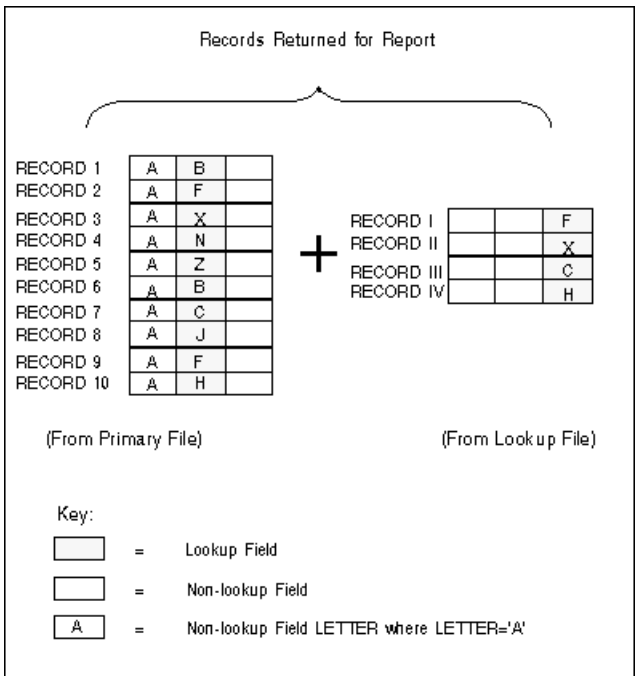

Lookup (1:1) from Primary and Secondary Files

1. A search is made of the primary file for all records which meet the selection criteria.
2. For each record selected in the primary file, Super Natural searches the secondary file for *each* record where the value of the Link field in the secondary file is the same as that of the `Link` field in the primary file in the record currently being processed. The selection criteria are applied to the records found in the secondary file.
3. For each record selected in the secondary file, Super Natural performs a search in the lookup file for the *first* record in which the value of the lookup field is the same as that of the lookup field in the secondary file record being processed.
4. The records found in the primary file, the records found in the lookup file and the records in the secondary file with a corresponding lookup field value are returned for the report.

Lookup (1:n)

Using lookup (1:n) you can link primary and secondary files to multiple files. When performing a file lookup (1:n), the relationship between lookup field and records returned can be expressed by the ratio (1:n). This means that if the lookup field has the same value for *n* records in the linked file, *n* records are returned for the report.

The only difference between lookup (1:n) and file link, is that you cannot use the fields in the lookup file(s) as part of the transaction's selection criteria.

Process Even if No Records Found = NO

If you have entered N in the `Process Even If No Records Found` field, processing of the lookup file is broken off if no record is found to match a record selected in the primary file (or secondary file if defined). The record from the primary file (or secondary file if defined) is no longer available to you.

This means that only the records in the primary file (or secondary file if defined) for which a record with a corresponding lookup field value is found in the lookup file are returned.

You use the transaction option Processing Sequence to determine the order in which the functions File Lookup (F), Calculations (C), Logical Conditions (L), Interfield Arithmetic (A), External Sorting (S) and Updating Records (U) are processed when a transaction is run. The default order is *FCLASU*. For further information on transaction options see **Adjusting a User Profile**.

When you run a transaction with `Process Even if No Records Found = NO`, the functions determined after (F) in the processing sequence are not performed for a record found in the primary file if an equivalent record in the lookup file is not found.

The following diagram shows which values are returned by the example earlier in this section if Process Even If No Records Found is set to NO:

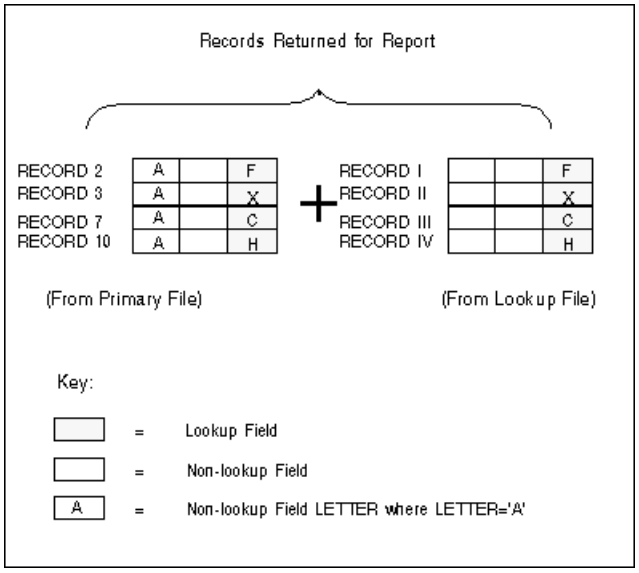

Compare this diagram with the diagram File Lookup Processing - Records Returned for Report earlier in this section.

Superfiles

Superfiles are transactions created by the administrator which you can use instead of a file. Superfiles are ready-made transactions or transaction templates which you can use as a basis for your own transactions. Superfiles are often transactions in which files are already linked and complicated or lengthy selection criteria, logical condition processing statements or calculations are already entered. You can take the superfile and then adapt it to your own needs. The aim of superfiles is to save you time.

Using Superfiles

To use a superfile

- Enter its name in the `File Name` field in the Add Transaction window

  Or:

  Select it from the File Selection List.

  The Worksheet appears with entries already made in it. You can now modify the transaction as described below.

What You Can Modify in a Transaction Using a Superfile

You can modify the following when using a superfile:

- Sort and control fields
- Display fields
- System functions
- Selection criteria
- Logical conditions
- SQL-SELECT
- Calculations

Modifications which you make to a superfile are only valid for the transaction you make them in. You cannot modify the superfile itself.

What You Cannot Modify in a Transaction Using a Superfile

You cannot modify the following when using a superfile:

- Files used
- Fields used
- File specifications

Extended File Descriptions and File Comments

Super Natural provides access to extended file descriptions and file comments stored in the data dictionary Predict. (This feature is only available at sites where Predict is installed.)

You can access extended file information by marking the Information column of any File Selection List window, for example, when adding a user file or a transaction.

9 Defining Fields

- What are Fields? 126
- Field Types 127
- Field Formats 130
- Constants 133
- Descriptors 135
- Extended Field Descriptions 136

This section describes the field types, formats and types of constants available in Super Natural and how to obtain extended field descriptions from the Software GmbH product Predict.

This section covers the following topics:

- **What are Fields?**
- **Field Types**
- **Field Formats**
- **Constants**
- **Descriptors**
- **Extended Field Descriptions**

What are Fields?

Fields are the smallest logical unit of information within a file. Fields are organized within records contained within files.

For further information on records and files, see ***Using a Database Structure*** and ***Files***.

Super Natural identifies each field by a two-character reference which appears in the Field Reference (Ref) column on the Worksheet. Field types are indicated in the Database Reference (DB) column on the Worksheet. For further information, see ***Working with the Worksheet***.

The following diagram shows how the name of a yacht called Ariadne is stored in a database in the demonstration file *SAG-TOURS-E-YACHT*:

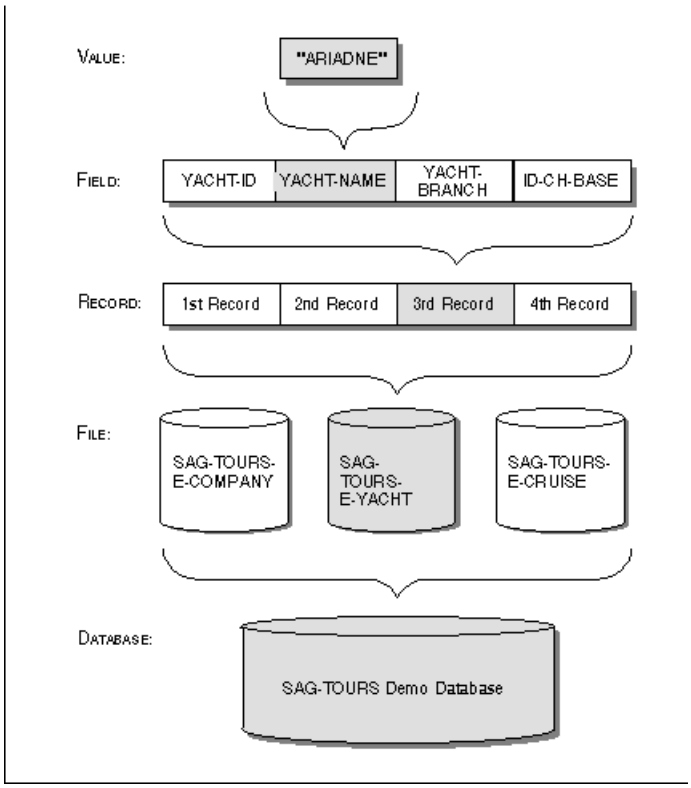

Field Types

The following sections describe the field types available in Super Natural.

The examples are taken from an imaginary file containing personnel data.

Elementary Fields

Elementary fields contain one value per record, e.g., the field `AGE` contains only one age per person.

The following diagram shows an elementary field:

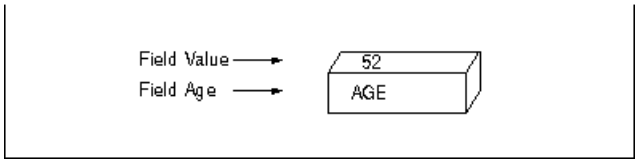

Multiple-Value Fields

A multiple-value field can have up to 191 occurrences per record. When using Adabas with the MUPEX function (see *Adabas* documentation), Super Natural supports up to 999 occurrences. For example, if a person speaks more than one language, you could use a multiple value field to store this information.

Each value within a multiple-value field is called an occurrence. You can deal with occurrences separately using referencing.

For further information on referencing, see ***Referencing Occurrences*** in *Using Editors*.

The following diagram shows a multiple-value field which has three occurrences:

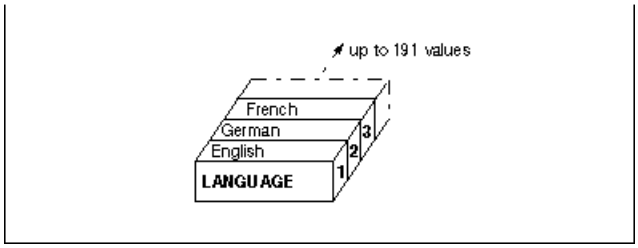

Groups

Groups connect related fields. For example, the group NAME connects the fields; `SURNAME`, `FIRST-NAME-1`, `FIRST-NAME-2`, `TITLE` and `FORM-OF-ADDRESS`.

A group can contain elementary fields and multiple-value fields. Groups can be contained or nested within other groups.

You can only use groups in the `Sequence (Seq)` column of the Worksheet. If you mark a group with a number in the Sequence (Seq) column, all the fields belonging to the group already listed in the `Field Name` column are automatically numbered.

If a group contains multiple-value fields or nested groups, you can limit the number of occurrences to be displayed in reports by modifying your Transaction Options. For further information on Transaction Options, see ***Adjusting a User Profile***.

The following diagram shows a group which contains a multiple-value field:

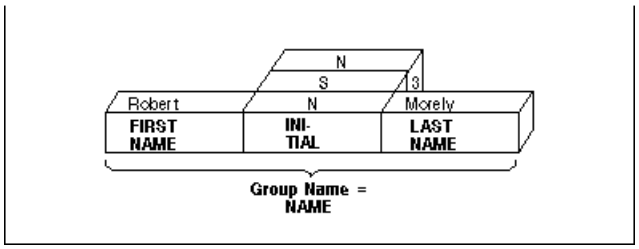

Periodic Groups

Periodic groups contain series of elementary and/or multiple-value fields which occurs more than once.

The values contained within a periodic group are structured like records. These records within records' are called occurrences. A periodic group can have up to 99 occurrences. When using Adabas with the MUPEX function (see *Adabas* documentation), Super Natural supports up to 999 occurrences.

You can limit the number of occurrences to be displayed in reports by modifying your Transaction Options. For further information on Transaction Options, see ***Adjusting a User Profile***.

You can deal with occurrences separately using referencing. For further information on referencing, see ***Referencing Occurrences*** in *Using Editors*.

The following diagram shows a periodic group:

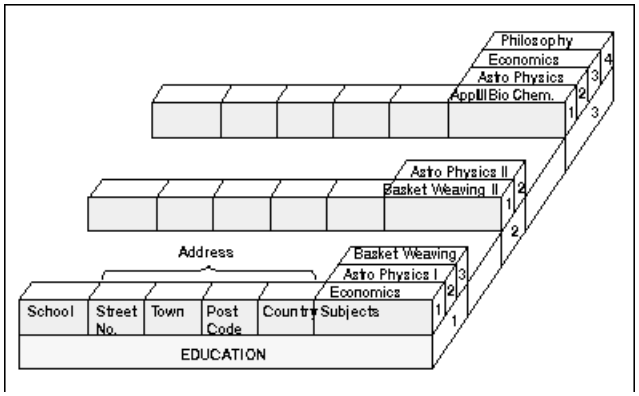

User Fields

User fields are not contained in a database file. User fields are defined by the user for a particular transaction. User fields are most commonly used in calculations, logical condition processing and SQL.

For information on how to define user fields, see `Field Name Column` in `Working with the Worksheet`.

Dynamic Input Fields

Dynamic input fields are a kind of user field which you can use to execute a transaction several times using different values. You can use dynamic input fields in the same way as any other user field. Each time you run a transaction using dynamic input fields, Super Natural asks you to supply a value for each one. This means that you do not have to modify the transaction to see what happens when a new value is used.

You can use dynamic input fields in the Selection, Calculation and Logical Conditions editors.

Note: You cannot run transactions using dynamic input fields in batch mode.

System Variables

System variables show information which comes directly from the system.

You can obtain a selection list of system variables by entering two asterisks (`**`) in the Field Name column in the Worksheet.

System variables are described in detail in section ***System Variables***.

Input Fields

Input fields are fields from PC or Work files which you use with the Data Selection modes PC FILE and WORK FILE.

Field Formats

The field format determines which values can be assigned to a field and how long it can be. Each format is identified by a code.

Codes and Lengths

The following table gives an overview of the formats available in Super Natural.

Format	Code	Length in Characters (Bytes)
Alphanumeric	A	1 - 253
Binary	B	1 - 126
Date	D	No length specification
Floating Point	F	4 or 8
Integer	I	1, 2 or 4
Numeric	N	1-29
Packed Numeric	P	1-29
Time	T	No length specification

The following sections describe the values which can be assigned to fields in each format.

Alphanumeric Format

Fields of alphanumeric (A) format can contain the following values: the letters of the alphabet, special characters, numerical digits, blanks or any combination thereof. The following are examples of alphanumeric values:

Examples

```
06024/71-0 #504
Ernest Schneckenbecker & Co.
BEAU300864TTRN20
```

Binary Format

Binary (B) fields can only contain the following values:

Format	Value
B1	0 - 255
B2	0 - 65535
B3	0 - 16777215
B4	-2147483648 - 2147483647
B5 - B126	Fields of these formats can contain any binary value.

Fields of the formats B1, B2, B3 and B4 can also contain alphanumeric values.

Date Format

The date (D) format you use in Super Natural is dependent on the Natural parameter DTFORM setting at your site. The following formats are possible where Y=year, M=month and D=day:

DD/MM/YYYY	(European)
DD.MM.YYYY	(German)
YYYY-MM-DD	(International)
MM/DD/YYYY	(USA)

Floating Point Format

Floating point (F) format is useful for representing numeric values accurately which would otherwise be too long. The values in fields with floating point format consist of a mantissa (number) and an exponent, as in the following examples:

Example 1

```
+1.234E-10
```

Where 1.234 is the mantissa and -10 is the exponent. The value represented is 0.0000000001234.

Example 2

```
-12345678E+12
```

Where -12345678 is the mantissa and +12 is the exponent. The value represented is -12345678000000000000.

Integer Format

Fields of integer (I) format can only have the following values:

Format	Maximum Negative Value	Maximum Positive Value
I1	-128	+127
I2	-32768	+32767
I4	-2147483648	+2147483647

As integers are whole numbers, decimals are not allowed!

Numeric Format

Fields of numeric (N) format can contain the following values: numerals, the special characters "+", "-", and the decimal character. The character which is used as the decimal character depends on the Natural settings (DC parameter) at your site. The following are examples of numeric values:

Examples

```
1000
-15
+0.0258
```

Numeric values can have a total of 29 numerals (the decimal character and + and - signs are not included in the field length). You can have a maximum of seven numerals after the decimal character.

Note: The term *numeric field* can refer to fields of the following formats: B, F, I, N and P.

Packed Numeric Format

Packed Numeric (P) values do not take up as much space internally as numeric values. Values in packed numeric format are represented in numeric format on your screen and in reports.

Values in packed numeric format can have a total of 29 numerals (the decimal character and + and - signs are not included in the field length). You can have a maximum of seven numerals after the decimal character.

Time Format

Values in time (T) format are presented as follows where H=hour, M=minute and S=second:

```
HH:MM:SS
```

Constants

Constants are values which cannot change - the opposite of variables. The following are examples of the use of constants:

- **Selection**
  NAME = 'SHAW'
- **Calculation**
  SALARY = SALARY * 1.2

- **Output**
  IF NAME = 'EMIL'
  THEN USERFIELD = '*****'
  ELSE USERFIELD = '_ '
- **Joining fields**

  RESULT-FIELD = NAME ! ', ' ! FIRST-NAME
- **Assigning values to a field**

  HOBBY = 'NOT/APPLICABLE'
  SAVINGS = 0

The following table shows how to represent the types of constants available in Super Natural:

Constant	Representation	Values
Alphanumeric	'value'	Value in format A. An apostrophe within an alphanumeric constant is represented by double apostrophes. Eg: 'HE SAID, ''HELLO''''
Date	D'value'	Value in format D as defined at your site
Extended Time	E'value'	Value is composed of the date in format D as defined at your site and the time in format T. Eg: E'1991-07-05 17:29:59'
Floating Point	value	Value in format F
Hexadecimal	H'value'	Value in format B. Value must be hexadecimal. For further information on hexadecimal values, see the Glossary.
Integer	value	Value in format I
Numeric	value	Value in format N
Packed	value	Value in format P
Time	T'value'	Value in format T

Note: Alphanumeric, date, extended time, time and hexadecimal constants must be enclosed within apostrophes ('.....'). Constants which can only contain numeric values must not be enclosed within apostrophes.

Descriptors

Descriptors enable Super Natural to search for data in the database without having to read every record. The database administrator can use both elementary and multiple-value fields to define descriptors.

The following sections describe the types of descriptors available in Super Natural.

Hyperdescriptors - Adabas only

Hyperdescriptors are user exits in Adabas and function like subdescriptors and superdescriptors in Super Natural. Ask your administrator how to use hyperdescriptors at your site.

Key Field Descriptors

There are two types of descriptors known as key fields in Super Natural.

Elementary Key Fields

Elementary key fields are elementary fields which have been defined as descriptors.

Multiple-Value Key Fields

Multiple-value key fields are multiple-value fields which have been defined as descriptors.

Non-Database Descriptors - Adabas only

A non-database descriptor is an elementary or multiple-value field which can be used in selection criteria in the same way as a descriptor, but is not defined as such in the database.

Note: When you use a non-database descriptor in the selection criteria, Adabas reads every record in the database.

Phonetic Descriptors - Adabas only

You can use phonetic descriptors to perform phonetic searches on fields. Phonetic searches result in the return of all values which sound similar to the phonetic descriptor you are using as a search value. Phonetic searches are useful if you are not sure how to spell what you are looking for! You can only use phonetic descriptors in the selection editor.

For further information on how to use phonetic descriptors, see *Using Editors*.

Subdescriptors - Adabas only

Subdescriptors are created from a portion of a field.

Superdescriptors - Adabas only

Superdescriptors are created from up to five fields (or parts thereof) which may or may not be descriptors. Superdescriptors can be of alphanumeric format or, if all the fields included are numeric, of binary format.

Extended Field Descriptions

Super Natural provides access to extended field descriptions stored in the data dictionary Predict. (This feature is only available at sites where Predict is installed.)

You can access extended field information by entering `PI` in the Information column either of the Worksheet or of any Field Selection List window.

10 Using Editors

- What are the Super Natural Editors? 138
- Editor Commands 139
- Editor Help System 143
- Operators Available in the Full-Screen Editors 144
- Selection Editor 145
- Calculation Editor 157
- Logical Conditions Editor 169
- SQL SELECT Editor 173
- PC File Description Editor 179
- Work File Description Editor 181
- User File Description Editor 183
- Arrays 183

This section describes the Super Natural editors.

This section covers the following topics:

- **What are the Super Natural Editors?**
- **Editor Commands**
- **Editor Help System**
- **Operators Available in the Full-Screen Editors**
- **Selection Editor**
- **Calculation Editor**
- **Logical Conditions Editor**
- **SQL SELECT Editor**
- **PC File Description Editor**
- **Work File Description Editor**
- **User File Description Editor**
- **Arrays**

What are the Super Natural Editors?

An editor is a tool for creating, modifying and deleting components necessary for creating transactions. Super Natural offers full-screen editors and file description editors. The editors which you can use for a transaction depend on your transaction modes.

You can also use the Natural Report Manager Layout Editor to edit the layout of reports during creation and modification. The Layout Editor is not related to the other Super Natural editors and is described in the section *Working with Natural Report Manager*.

The Super Natural full-screen editors and file description editors function in the same way.

Full-Screen Editors

You use full-screen editors to tell Super Natural which data you want from the database, to specify calculations which take place when the transaction is run and for logical condition processing. The following full-screen editors are available:

- Selection Editor
- SQL SELECT Editor
- Calculation Editor
- Logical Conditions Editor

Full-screen editors are empty when you invoke them for the first time.

File Description Editors

You use the file description editors to describe file layouts. The following file description editors are available:

- PC File Description Editor
- Work File Description Editor
- User File Description Editor

File description editors consist of columns.

Editor Commands

This section describes the commands available in the editors and the editors' online help system.

Line Commands

Line commands influence the lines in the editors and are structured as follows:

```
escape-character  line-command-character
```

Line commands are entered at the beginning of an editor line.

Escape Character

The first character of each line command is the escape character defined for you. The default escape character is a period (.). The default escape character is overridden if a different entry is made in an existing Natural editor profile for you or for Super Natural.

To check or modify the escape character in the Natural editor profile, enter `PROFILE` in the Natural editor command line. Then select `Additional Options` and `Editor Defaults`. Here you can check or modify the `Escape Character for Line Command`.

Line-Command Character

You can use some line-command characters in combination with a repetition factor or with a marker.

(Blank)

Entering a blank at the end of each line command prevents the editor from trying to interpret any of the information in the editor line as part of the line command.

Issuing Line Commands

To issue a line command

1. Type the escape character at the first position of an editor line.
2. Type the line command character immediately after the escape character.
3. Type a blank.
4. Press Enter.

   Do not leave a blank between the escape character and the line command character.

List of Line Commands

The line commands available in the Super Naturaleditors are listed below:

Note: The notation n indicates a repetition factor. The default repetition factor is 1. You must enclose the repetition factor in parentheses.

Note: The line in which you enter the command is referred to as the current line.

Command	Function
.C	Copies the current line and inserts it directly below the current line.
.C(n)	Copies the current line n times and inserts the new lines directly below the current line.
.CX	Copies the line previously marked with X and inserts it directly below the current line. For further information on marking lines, see the description of the **.X command**.
.CX(n)	Copies the line previously marked with X n times and inserts the new lines directly below the current line. For further information on marking lines, see the description of the **.X command**.
.CY	Copies the line previously marked with Y and inserts it directly below the current line. For further information on marking lines, see the description of the **.Ycommand**.
.CY(n)	Copies the line previously marked with Y n times and inserts the new lines directly below the current line. For further information on marking lines, see the description of the **.Y command**.
.CX-Y	Copies the block of lines previously delimited by the X and Y markers and inserts it directly below the current line. For further information on marking lines, see the descriptions of the .X and the .Y commands.

Command	Function
.CX-Y(n)	Copies the block of lines previously delimited by the X and Y markers ntimes and inserts it directly below the current line. For further information on marking lines, see the descriptions of the .Xand the .Y commands.
.D	Deletes the current line.
.D(n)	Deletes n lines starting with the current line.
.I	Inserts a default of 6 blank lines directly below the current line. Lines that are left blank are eliminated when you next press .
.I(n)	Inserts nempty lines after the current line, where ncan be in the range from 1 to 13. Lines that are left blank are eliminated when you next press .
.L	Undoes all modifications you have made to the line since you last pressed .
.MX	Moves the line previously marked with X and inserts it directly below the current line. For further information on marking lines, see the description of the **.X command**.
.MY	Moves the line previously marked with Y and inserts it directly below the current line. For further information on marking lines, see the description of the **.Y command**.
.MX-Y	Moves the block of lines previously delimited by the X and Y markers and inserts it directly below the current line. For further information on marking lines, see the descriptions of the .X and the .Y commands.When you move lines using the .M commands, the lines below automatically move up to fill the gap which would otherwise be left.
.P	Scrolls so that the current line appears at the top of the screen.
.S	Splits the current line at the cursor position. The content of the current line after the cursor position is written into the beginning of a new line which is created below the current line.Not allowed in the Logical Conditions Editor.
.X	Marks a line or delimits the beginning of a block of lines.
.Y	Marks a line or delimits the end of a block of lines.A line marked with both X and Y using the .X and .Y commands, is indicated by Z. If you want to use the line with the .C or the .M command, you must still reference it with either X or Y.

Editor Direct Commands

Editor direct commands are structured as follows:

```
EDIT editor-direct-command
```

The key word `EDIT` must precede every editor direct command.

Issue an Editor Direct Command

To issue an editor direct command

- Enter the command in the command line of any Super Natural editor except for the Layout Editor.

List of Editor Direct Commands

Command	Description
ADD	Adds 6 empty lines at the end of the lines.
ADD (n)	Adds n empty lines at the end of the lines. The value n must be in the range from 1 to 6.
BOTTOM	Positions to the end of the lines.
CHANGE 'value1'value2'	Scans for the string entered as value 1 and replaces it with the string entered as value 2. Values which have been replaced are marked with R. Not allowed in the Logical Conditions Editor.
CLEAR	Deletes all the editor lines.
DX	Deletes the line marked with X.
DY	Deletes the line marked with Y.
DX-Y	Deletes the block of lines delimited by X and Y.
EX	Deletes all the lines above the line marked with X.
EY	Deletes all the lines below the line marked with Y.
EX-Y	Deletes all the lines except for the block of lines delimited by X and Y.
LET	Undoes all modifications made since you last pressed .
RESET	Deletes all line markers except for S and R.
SCAN value'	Scrolls to the string entered as value'. The single quotation marks are optional. Lines containing strings found by the SCAN value' command are marked with S.
SCAN =	Scrolls to the next occurrence of the string entered as value'.
TOP	Positions to the top of the lines in the editor.
X	Scrolls to the line marked with X.
Y	Scrolls to the line marked with Y.
+H	Pages half a page forwards.
-H	Pages half a page backwards.
+n	Positions n lines forwards.
-n	Positions n lines backwards.
+P	Pages one page forward.
-P	Pages one page backwards.

Note: You can also use the Super Natural Paging functions for positioning within the editors.

The S Marker and the R Marker

The S marker and the R marker overwrite any other markers previously set. Lines are marked with S or R until the `SCAN` command or `CHANGE 'value1'value2'` command respectively is deactivated by issuing another command. The original markers become visible again.

General Editor Commands

The commands listed below are only available in the Super Natural editors.

Command	Description
CHECK	Checks your entries in all the Super Natural editors apart from the User File Description Editor and pin-points errors. You can correct the error, ignore it and continue working using `CANCEL`, invoke syntax help by pressing or leave the editor and save the error using EXIT.
CONTINUE	Invokes a syntax help window which tells you what you can do next. Available in all the full-screen editors apart from the SQL SELECT Editor. If you issue the `CONTINUE` command when there is an error in the editor lines, the error is pin-pointed and you can either correct it or invoke syntax help as for the `CHECK` command.The description of Sample Transaction 1 in the Transaction in the *Tutorial* demonstrates how to use the Continue function. For further information on using the `CONTINUE` command in the Logical Conditions Editor, see ***Logical Conditions Editor*** in *Using Editors*.
DELETE	Deletes all the editor lines. This achieves the same as the `EDIT CLEAR` command.
FIELDS	Invokes the Field Selection List window. The fields which are already in use are listed first and marked with a chevron (>). You can page forward to list the other fields in the file(s) you are using.
REFRESH	Deletes the lines in the current editor and recalls the lines which were present (if any) when the transaction was last saved.
TABLES	Invokes the List DB2 Tables window. Issue from the SQL SELECT editor.

Editor Help System

Two types of help are available in the Super Natural editors:

Help for Editor Commands

To invoke the help for editor commands

1 Position the cursor in the editor area.

2 Press PF1.

A help screen appears where you can choose between displaying information on editor line commands and editor direct commands.

Syntax Help

Syntax help is available in all the full-screen editors apart from the SQL SELECT Editor. Syntax help does not just display information, but allows you to make entries which are then transferred to the underlying screen.

You can invoke syntax help if you don't know what to do next.

To invoke syntax help if you don't know what to do next

- Issue the `CONTINUE` command.

  You can also invoke syntax help if the `CHECK` command has pin-pointed an error which you do not know how to correct.

To invoke syntax help if you have just issued the `CHECK` command

- Press Enter.

  In both cases, a window appears telling you which alternatives are available. Syntax help windows display selection lists of objects or options. Selecting an object or option may lead to a further syntax help window, may invoke another Super Natural window e.g. the Define User Field window or may result in an entry being inserted in the editor lines.

Many syntax help windows display the option `Mark to Replace`. If you mark this option, the entry you have selected will replace the error in the editor lines instead of being inserted.

Note: The help system offered in the SQL SELECT Editor is different to the help offered in the other Super Natural editors and is described later in this section.

Operators Available in the Full-Screen Editors

The following operators are available in the full-screen editors:

Operator	Selection Statement	Calculation Statement	Logical Condition Statement		
			IF Clause	THEN Clause	ELSE Clause
EQ (=)	X	X	X	X	X
NE (^=)	X		X		
LT (<)	X		X		
LE (<=)	X		X		
GT (>)	X		X		
GE (>=)	X		X		
THRU	X		X		
ST	X				
NOT	X				
AND	X		X		
OR	X		X		
OR=	X		X		
+		X		X	X
-		X		X	X
/		X		X	X
*		X		X	X
|		X		X	X

Note: If your keyboard does not have the vertical bar character, your system administrator will tell you which character to use.

Selection Editor

You use the Selection Editor for entering selection criteria in reporting transactions with the transaction mode Data Selection = FULL-SCREEN. Selection criteria tell Super Natural which data you want from the database.

To invoke the Selection Editor

- Issue the `SELECTION` command.

  The `SELECTION` command is assigned to PF10.

  The Selection Editor appears:

```
15:27                      ***** Super Natural *****                05.Jan.1993
SNZUL-S                       - Selection Editor -                      Tuesday
                                                                              ↩

                                                                              ↩

      1  <                                                              >    1
      2  <                                                              >    2
      3  <                                                              >    3
      4  <                                                              >    4
      5  <                                                              >    5
      6  <                                                              >    6
      7  <                                                              >    7
      8  <                                                              >    8
      9  <                                                              >    9
     10  <                                                              >   10
     11  <                                                              >   11
     12  <                                                              >   12
     13  <                                                              >   13
     14  <                                                              >   14
     15  <                                                              >   15
                                                                              ↩

Define selection lines or use CONTINUE                                        ↩

Command ===>                                                                  ↩

Enter-PF13--PF14--PF15--PF16--PF17--PF18--PF19--PF20--PF21--PF22--PF23--PF24---
      Lay   Chlst Menu  Opt   Modes       --    ++                            ↩
```

The following sections describe how to construct selection criteria. The examples are taken from the demonstration file *SAG-TOURS-E-YACHT*.

Selection criteria consist of one or more selection statements which are structured as follows:

```
[NOT] database-field [operator {value
                                function value}]
```

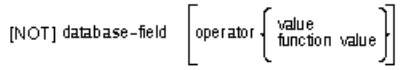

You can combine selection statements using the logical operators AND and OR.

The following is a more detailed syntax diagram describing selection statements:

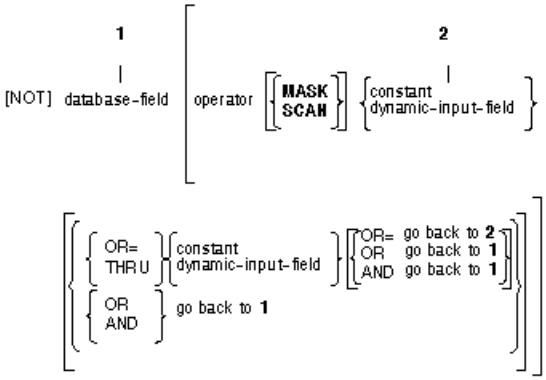

This documentation uses the Natural syntax conventions which are described in the Preface.

Note: The `CHECK` and the `CONTINUE` functions tell you exactly what you can enter in the situation you are in.

The following is the key for the alternative syntax diagram:

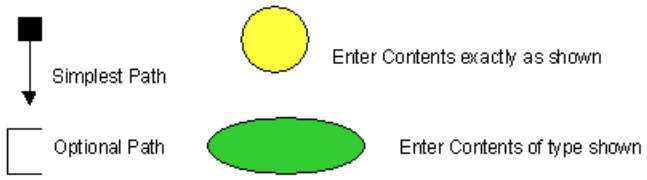

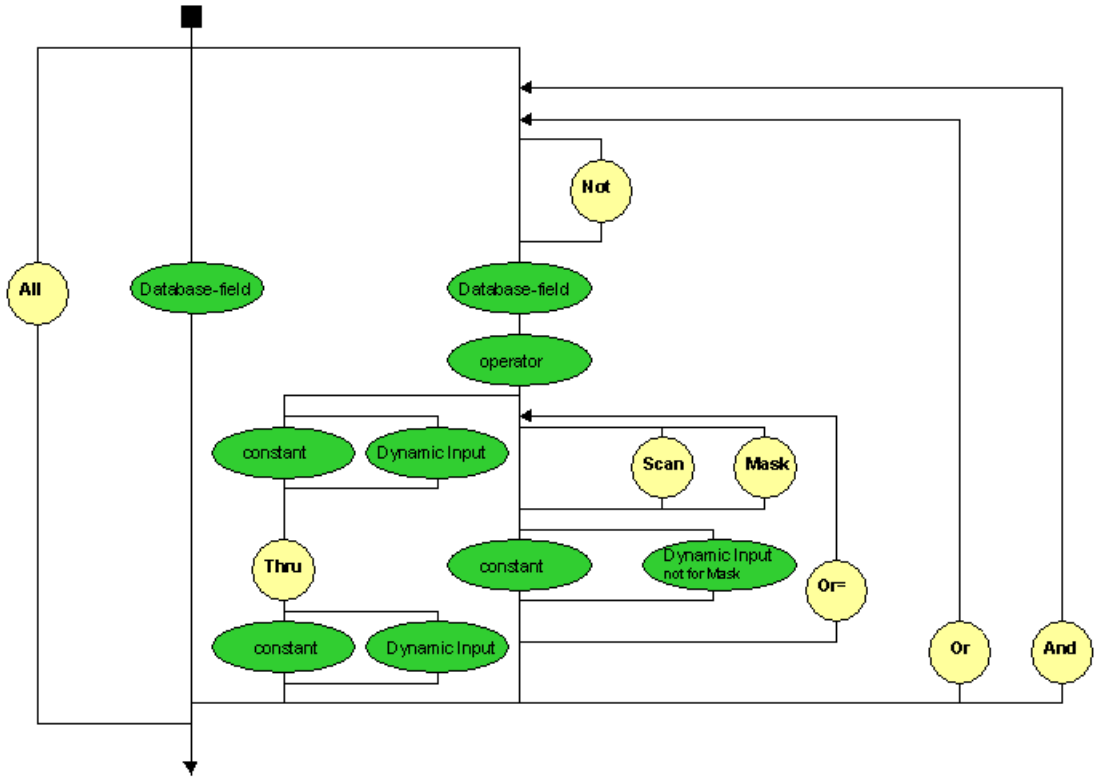

Database Field

You can either use the full field name or the field reference shown in the REF column of the Worksheet.

If a field name occurs in two or more of the files you are using, you must always use the field reference.

You may not use user fields, groups and periodic groups here. You can, however, use a field contained within a group.

The performance of Super Natural is improved if you use key fields as selection criteria.

Operators

The following operators are available:

Operator	Meaning	Records Returned
EQ or =	Equals	Where the specified field has the specified value
NE or ^=	Not equal to	Where the specified field does not have the specified value
GT or >	Greater than	Where the value of the specified field is greater than the specified value
LT or <	Less than	Where the value of the specified field is less than the specified value
GE or >=	Greater than or equal to	Where the value of the specified field is greater than or equal to the specified value
LE or <=	Less than or equal to	Where the value of the specified field is less than or equal to the specified value
ST	Starting with	Where the value of the specified field starts with the specified string

Extended Operators

The following operators are available:

Operator	Meaning	Records Returned
THRU	Range of values	Where the specified field has the specified range of values
OR=	Value enumeration	Where the specified field has all specified values

THRU

You use the extended operator THRU to search for a range of values.

Example:

```
YACHT-NAME = 'A' THRU 'F'
```

This returns all the records for yachts whose names start with A, B, C, D or E, and any yacht with the name F.

Note: Values starting with FA are not returned.

OR=

To search for more than one value for a field, use the extended operator *OR* = between each of the values.

Example:

```
YACHT-TYPE = 'PACIFIC 29' OR= 'PACIFIC 315' OR=
'PACIFIC 325' AND ID-CH-BASE >'11'
```

This finds records containing yachts of type Pacific 29, Pacific 315 and Pacific 325 and from that group returns those whose charter base ID is the number twelve or above.

Value

After the operator you can enter either a constant or a dynamic input field depending on the context. You can either enter the value directly or issue the `CONTINUE` command if you are not sure which kind of value to use.

To find out which types of values are relevant to your present situation

- Issue the `CONTINUE` command.

Constants

For further information on database fields and constants, see *Defining Fields*.

Dynamic Input Fields

You can use dynamic input fields if you want to execute the transaction several times using different values for a field or fields each time.

To create a dynamic input field

- Enter the hash sign (#) where you would normally enter the value.

Example:

```
YACHT-NAME = #
```

The Define User Field window appears with a hash sign (#) in the `Dynamic Input` field when you issue either the `CHECK` or `CONTINUE` command:

```
15:29                      ***** Super Natural *****                05.Jan.1993
SNZUL-S                       - Selection Editor -                      Tuesday

                          +-----------------Define User Field-----------------+
      1  < YACHT-NAME = # ! Field:                                            !
      2  <                !                                                   !
      3  <                ! Name or value .. ________________________________ !
      4  <                ! Format ......... A                                !
      5  <                ! Length ......... 30_                              !
      6  <                ! Dec. places .... _                                !
      7  <                ! Subfield of .... ________________________________ !
      8  <                ! Offset ......... ___                              !
      9  <                ! Dynamic input .. #                                !
     10  <                !                                                   !
     11  <                +---------------------------------------------------+
     12  <                                                            >   12
```

Make your entries in the Define User Fieldwindow as described in the section *Fields*.

You have now defined a dynamic input field.

Note: When you return to the Selection Editor, the hash (#) sign is replaced by the user field name you have just defined.

When you run the transaction, the Dynamic Input Value window appears as in the following example:

```
15:30                      ***** Super Natural *****                05.Jan.1993
SN3011                           - Worksheet -                          Tuesday

Ref DB    Field Name              +----------- Dynamic Input Value -----------+
AA  1K    YACHT-ID ............. !  Transaction:  IDDM6                       !
AB  1K    YACHT-NAME ........... !                                            !
AC  1     YACHT-BRANCH .......... ! DYNAMIC .. ________________________________ !
AD  1K    ID-CH-BASE ........... +-------------------------------------------+
AE  1K    ID-S-OWNER ......................   ___   ___   __   __   __   __
```

Enter the value you want your dynamic input field to have when the transaction is run this time.

The transaction is run using the value specified.

You can also use multiple dynamic input fields as shown in the examples below:

Examples:

```
WIDTH = # THRU #
```

```
LENGTH = 10 THRU #
```

```
YACHT-TYPE = # AND LENGTH GT #
```

```
YACHT-NAME = SCAN #
```

Each time you execute or run the transaction, Super Natural asks you to supply a value for each dynamic input field.

You may have problems if you run a transaction containing dynamic input fields in batch mode.

Note: You can also use dynamic input fields in the Calculation and Logical Conditions Editors.

Functions

You can use the `Scan` function or the `Mask` function in the Selection Editor after the EQUALS operator.

Scan Function

You can use the `Scan` function to search for a specific string of characters located anywhere within an alphanumeric field. Use the `Scan` function as follows:

```
DATABASE FIELD = SCAN 'VALUE'
```

Example:

```
YACHT-NAME = SCAN 'Q'
```

This returns all the records where the value for the field `YACHT-NAME` contains the letter Q.

Mask Function

You can use the `Mask` function to search for a specific string of characters within specific positions of an alphanumeric field. Use the mask function as follows:

```
DATABASE FIELD = MASK 'definition'
```

The mask definition defines the position of the character string or strings you want to look for. Mark the positions whose content you want to be ignored with a period (.) and enter the values you are looking for in the positions in which you are looking for them. You do not need to enter periods after the last value.

Example:

```
YACHT-NAME = MASK '.HA...A'
```

This returns all the records where the value for the field `YACHT-NAME` contains the letter H in the second position and A in the third and seventh positions.

Logical Operators

The following logical operators are available and are executed in the following order:

```
NOT
```

```
AND
```

```
OR
```

Selection criteria enclosed within parentheses are evaluated first.

Example:

```
((YACHT-TYPE = 'PACIFIC 34' OR MOTOR > 60) AND ID-CH-BASE = '12' AND NOT MOTOR =55)
```

First this finds the records which have either yacht type Pacific 34 or a motor larger than 60 and from that group returns those records where the charter base ID is 12, but not one with the motor of 55.

NOT

Example:

```
YACHT-TYPE = 'ATLANTIC 32' AND NOT ID-CH-BASE = '12'
```

This returns all the records for Atlantic 32 yachts who have not the charter base ID number 12.

AND

You can combine selection criteria statements with the logical operator AND to restrict the range of records returned.

Example:

```
YACHT-TYPE = 'ATLANTIC 32' AND ID-CH-BASE >= '12'
```

This returns all the records for Atlantic 32 yachts whose charter base ID is the number twelve or above.

Note: The field `ID-CH-BASE` is an alphanumeric field, so the value 12 must be enclosed within quotation marks.

OR

If you combine selection criteria statements with the logical operator OR, each statement is handled independently.

Example:

```
YACHT-TYPE = 'ATLANTIC 32' OR ID-CH-BASE >= '12'
```

This returns all the records for Atlantic 32 yachts and for yachts whose charter base ID is the number twelve or above.

Remember that OR is processed after THRU, OR= and AND.

Example :

```
YACHT-TYPE = 'PACIFIC 29' OR YACHT-TYPE = 'PACIFIC 315' OR
YACHT-TYPE = 'PACIFIC 325' AND ID-CH-BASE >'11'
```

This first finds and returns the records of yachts of type Pacific 325 which have the charter base ID 12 or above. In addition, the records of yachts of type Pacific 29 and Pacific 315 are returned.

Compare this result with that of the example given for the OR= operator.

Note: You cannot use the OR= operator as a shorter way of entering multiple OR statements - the results are different!

Special Cases

Multiple File Considerations

You can only connect selection statements using fields from different files using the AND operator.

For example, if you are using the files *SAG-Tours-E-Yacht* and *SAG-Tours-E-Prices*, the following selection criteria statement is not allowed:

```
YACHT-TYPE = 'INDIC-CAT 32' OR PRICE-1W < 2000
```

You would have to use the following:

```
 CH-YACHT-TYPE = 'INDIC-CAT 32' OR PRICE-1W < 2000
```

where the field `CH-YACHT-TYPE` is also from the *SAG-Tours-E-Prices* file.

Field Name

If you specify a field name as your only selection criteria, Super Natural reads all the records from the file which contain a value for the field specified and returns them in ascending order of value. You can only use descriptors in this manner.

Example

```
YACHT-NAME
```

This returns all the records in the file sorted according to the alphabetical order of the yacht names if no other sort criteria are specified.

You can use a logical operator to connect the selection statement *field name* to further selection statements.

You can only use the selection statement *field name* as the first selection statement.

File Linking Considerations

If you specify a field name from your primary file as your only selection criteria, Super Natural reads all the records from the primary file which contain a value for the field specified and returns them in ascending order of value.

If you specify a field name from the secondary file as your only selection criteria, Super Natural reads all the records from the primary file (READ PHYSICAL).

All

If you enter *ALL* as your only selection criteria, Super Natural returns all the records in the file or files in physical sequence (the order in which they are stored in the database) if no other sort criteria are specified.

You cannot connect the selection statement *ALL* to further selection statements.

Using Phonetic Descriptors as Selection Criteria

You can use phonetic descriptors to perform phonetic searches on fields. Phonetic searches result in the return of all values which sound similar to the search value. Phonetic searches are useful if you are not sure how to spell what you are looking for!

Example

```
YACHT-NAME-PH = PERSEFFUNNY'
```

This returns all the records where the value for the field `YACHT-NAME` sounds like Perseffunny'.

Note: You cannot display phonetic descriptors themselves in a report.

Locking Selection Criteria

You can lock the first *n* selection lines in the Selection Editor so that they cannot be modified. Only the creator of a transaction can lock selection lines.

You can add further selection criteria but you may only use the logical operator AND to connect new selection statements to the locked lines.

You can also lock the whole Selection Editor. This feature is useful if you are going to copy a transaction into a common library and you don't want other users to change the selection criteria.

You cannot lock selection lines if the transaction uses a superfile.

You cannot unlock locked selection lines.

To lock selection criteria

1 Issue the `LOCK` command from within the Selection Editor.

You can only issue the `LOCK` command if the selection criteria are correct.

The Lock Selection Lines window appears:

```
15:35                      ***** Super Natural *****               05.Jan.1993
SNZUL-S                       - Selection Editor -                    Tuesday
                                                                            ↩

                           +--------------Lock Selection Lines---------------+
      1  < YACHT-NAME = DYN !                                                ↩
!
      2  <                  ! Enter the number of lines which shall be locked !
      3  <                  ! into the entry 'locked selection lines'.       ↩
!
      4  <                  ! The value must be greater than the old value   ↩
!
      5  <                  ! but smaller than the number of existing        ↩
!
      6  <                  ! selection lines.                               ↩
!
      7  <                  ! To lock the whole selection editor, enter 99.  ↩
!
      8  <                  !                                                ↩
!
      9  <                  ! Existing selection lines .. 1                  ↩
!
     10  <                  ! Locked selection lines .... 0_                 ↩
!
     11  <                  !                                                ↩
!
     12  <                 +-------------------------------------------------+
     13  <                                                            >   13
```

2 Enter the number of selection lines you want to be locked.

For example, if you enter 5, the first five lines are locked and if you enter 2, the first two are locked.

To lock the whole Selection Editor

- Enter 99.

A confirmation window appears.

To confirm the lock

- Enter Y in the confirmation window.

  The lock comes into effect immediately, but if you leave the Selection Editor using the `CANCEL` command or the `MENU` command, the lock is lost. This only applies to the first time you leave the Selection Editor after defining a lock

  Locked selection lines are presented in the same way as normal protected fields.

Calculation Editor

You use the Calculation Editor to enter calculation statements. You can define multiple calculation statements separated by blanks.

This section covers the following topics:

- Invoking the Calculation Editor
- Calculation statement elements
- Types of calculation statement (arithmetic, assigning values to a field and joining fields)
- Using Date and Time format.

Invoking the Calculation Editor

To invoke the Calculation Editor

- Issue the `CALCULATION` command.

  The Calculation Editor appears:

```
15:36                      ***** Super Natural *****                05.Jan.1993
SNZUL-C                     - Calculation Editor -                      Tuesday
                                                                              ↩
                                                                              ↩
      1  <                                                          >    1
      2  <                                                          >    2
      3  <                                                          >    3
      4  <                                                          >    4
      5  <                                                          >    5
      6  <                                                          >    6
      7  <                                                          >    7
      8  <                                                          >    8
      9  <                                                          >    9
     10  <                                                          >   10
     11  <                                                          >   11
     12  <                                                          >   12
     13  <                                                          >   13
     14  <                                                          >   14
     15  <                                                          >   15
                                                                              ↩
SELECTION successfully terminated                                             ↩
Command ===>                                                                  ↩
Enter-PF1---PF2---PF3---PF4---PF5---PF6---PF7---PF8---PF9---PF10--PF11--PF12---
      Help  Next  Exit  Field Check Flip  -     +          Cont  Run   Canc ↩
```

Calculation Statement Elements

Calculation statements consist of various mandatory and optional elements in the positions shown in the following diagram:

```
[ROUNDED]result-field=  [mathematical-function]   operand[operatoroperand]...
```

This documentation uses the Natural syntax conventions which are described in the Preface.

Note: The `Continue` function tells you exactly what you can enter in the situation you are in.

Result Field (Mandatory)

The result field contains the result of your calculation. You can either define a user field or use a database field. For further information on user fields, see the Field Name column in ***Defining User Fields and Dynamic Input Fields*** in *Working with the Worksheet*.

In reporting transactions, the result of an arithmetic calculation is used for output purposes only and has no effect on the value of the field in the database. However, you can use the same type of calculation in data maintenance transactions to update data (for further information, see ***Working with Data Maintenance Transactions***).

Equals Operator (=) (Mandatory)

The result of each statement must be introduced by the equals operator (=).

Operand (Mandatory)

An operand can either be a field or a constant according to the type of statement you are creating. For further information on fields and constants, see ***Defining Fields***. The different types of calculation statement are described later in this section. For further information on using dynamic input fields, see ***Operators*** in *Selection Editor*.

ROUNDED (Optional)

You use the ROUNDED keyword as follows:

```
ROUNDED result-field
```

The result field is rounded to the field length and decimal places defined as shown below:

Value	Result Field Definition		Value in Result Field	
	Length	Decimal Places	WITHOUT Rounding	WITH Rounding
3.87654321	5	3	3.876	3.877
4.49	5	3	4.49	4.49
4.49	5	0	4	5

Example:

```
ROUNDED RESULT = PERCENT (BUNKS)
```

`RESULT` is a numeric user field with Field Length 3 and Dec. Places 2. If you run a transaction using YACHT-NAME ST P' as your selection criteria, the field `RESULT` shows how many percent of the total number of bunks available each yacht whose name starts with P contains with the number rounded to two decimal places.

Mathematical Functions (Optional)

When you use a mathematical function, you must enclose the operand it is to work on in parentheses as follows:

```
mathematical-function (operand)
```

You can use the following mathematical functions:

Function	Description
ABS(operand)	Calculates the absolute value of the operand.
ATN(operand)	Calculates the arc tangent of the operand.
COS(operand)	Calculates the cosine of the operand.
EXP(operand)	Calculates the exponential of the operand.
FRAC(operand)	Calculates the fractional part of the operand.
INT(operand)	Calculates the integer part of the operand.
LOG(operand)	Calculates the Natural logarithm of the operand.
SGN(operand)	Calculates the sign of the operand (-1, 0, +1).
SIN(operand)	Calculates the sine of the operand.
SQRT(operand)	Calculates the square root of the operand. If the operand is negative, it is treated as positive. The maximum number of digits that can appear before the decimal point of the operand is 22.
TAN(operand)	Calculates the tangent of the operand.
VAL(operand)	Takes a numeric value from an alphanumeric operand and puts it into a numeric result field. The content of the operand must be the character representation of a numeric value. Leading or trailing blanks are ignored. Decimal points and leading sign characters are processed. If the result field is not long enough, decimal digits are truncated.
PERCENT(operand)	Calculates the percentage of the field for each record found in relation to the sum of all the values of the field found. For further information, see below.

Note: The functions ATN, COS, LOG, SIN, and TAN first convert the operand to format F8, next evaluate the function, and then convert the result back to the original format of the operand.

PERCENT

The `PERCENT` function calculates the percentage of the field for each record found in relation to the sum of all the values of the field found.

Example:

```
RESULT = PERCENT (BUNKS)
```

If you use YACHT-NAME ST P' as your selection criteria, the field `RESULT` will show how many percent of the total number of bunks available each yacht whose name starts with P contains.

If you are dealing with percentages smaller than 1%, make sure that the field is defined with decimal places (for further information, see *Working with the Worksheet*).

Error 3088: Percent function not possible. Change processing sequence

To change the processing sequence

1. Issue the `OPTIONS` command.

   The Transaction Options window appears.
2. Page forward to Processing Options.
3. Change the option `Processing Sequence` so that S' comes before C'.
4. Press Enter.

   You can now use the `PERCENT` function. For further information on transaction options, see *Adjusting a User Profile*.

Operands - Type and Format

Mathematical Function	Operand Type	Operand Format
ABS ATN COS EXP FRAC INT LOG SGN SIN SQRT TAN	Constant, Elementary field, Single occurrence of multiple-value field or periodic group	N P I F
VAL	Constant, Elementary field, Single occurrence of multiple-value field or periodic group	A
PERCENT	Elementary field, Single occurrence of	N P I F

Mathematical Function	Operand Type	Operand Format
	multiple-value field or periodic group	

Operators

Arithmetic Operators

The following operators are available:

Operand	Function
+	Addition
-	Subtraction
*	Multiplication
/	Division
|	Concatenation (joining fields)

Note: If your keyboard does not have the vertical bar character (|), your system administrator will tell you which character to use.

Priority of Arithmetic Operators

You use parentheses to specify the order of operations. Operations enclosed within parentheses ( ) will are performed first. The priority of operation processing is as follows:

```
Operations enclosed within parentheses ( )
```

```
Multiplication and Division
```

```
Addition and Subtraction
```

If both multiplication and division, or both addition and subtraction, occur within an arithmetic calculation, the operation which occurs first has priority.

Examples of Arithmetic Operations:

```
SALARY = SALARY * 1.1
```

```
NEW-SALARY = SALARY * 1.1
```

```
PAST-EARNINGS = SALARY * YEARS-WITH-COMPANY
```

```
NEXT-5YR-EARNINGS = (SALARY * 1.25) * 5
```

```
NEXT-5YR-EARNINGS-PER-MONTH = (SALARY * 1.25) * 5 / 60
```

```
SEASON-LENGTH = SEASON-END - SEASON-START
```

Joining Fields (Concatenation)/Operator (|)

The joining fields/(concatenation) operator (|) is described in the section Different Types of Calculation Statements later in this section.

Note: If your keyboard does not have the vertical bar character (|), your system administrator will tell you which character to use.

Different Types of Calculation Statements

There are three types of calculation statement as described in the following sections:

- Arithmetic calculation
- Assigning Values to a field
- Joining fields (concatenation)

Arithmetic Calculation

You create arithmetic calculation statements as follows:

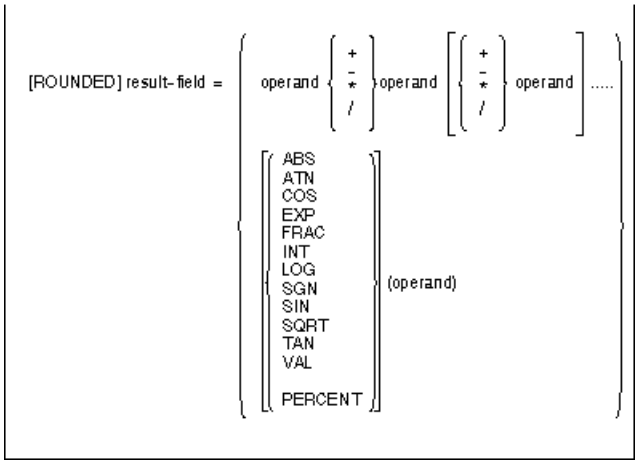

This documentation uses the Natural syntax conventions which are described in the Preface.

Note: The `Check` and the `Continue` functions tell you exactly what you can enter in the situation you are in.

The following diagram uses an alternative method of representing arithmetic calculation statements:

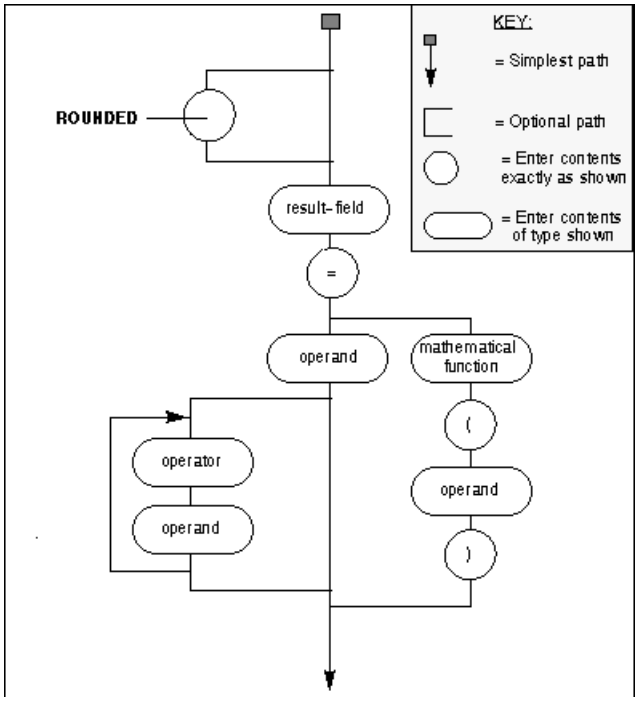

You can use the following types of result field and operand:

Result Field	Operand
Numeric User Field	Numeric Elementary Field
Numeric Elementary Field	Numeric Multiple-value Field
	Numeric Periodic Group
	Numeric Constant
	Dynamic Input Field

For further information on working with multiple-value fields and periodic groups, see *Array Processing*.

Assigning Values to a Field

You can use the Calculation Editor to assign a new value to a field as shown below:

```
result-field = operand
```

The combination of result field and operand must be one of the following:

Result Field	=	Operand
Alphanumeric Elementary Field	=	Alphanumeric Constant
Alphanumeric Elementary Field	=	Numeric Constant
Alphanumeric Elementary Field	=	Alphanumeric Elementary Field
Alphanumeric Elementary Field	=	Numeric Elementary Field
Numeric Elementary Field	=	Numeric Constant
Numeric Elementary Field	=	Numeric Elementary Field
Exceptions:		
Numeric Elementary Field	=	Numeric Array(n-m)
Array1(n:m)	=	Array2(x:y)
Array1(n:m)	=	Constant

The value assigned has no effect on the actual value contained in the database, unless the assignment operation has been used in a data maintenance transaction.

Note: Assignment values provided for alphanumeric fields must be enclosed in single quotation marks.

Examples of Assignment Operations

```
DID-BUSINESS-CONDITIONS = PAYED'
PRICE-1W = 300
```

Joining Fields (Concatenation)

You can use the joining fields (concatenation) operator to combine the values of several fields and/or user-specified text into a single output field. Use the vertical bar (|) (EBCDIC H4F') as shown below:

```
result-field = operand |operand|[ operand]...
```

The result field must be an alphanumeric field. The operand can be an elementary field, a multiple-value field, periodic group, hex constant, dynamic input field, text string (alphanumeric constant) or blank.

You can use the following types of result field and operand:

Result Field	Operand
Alphanumeric Field	Alphanumeric Elementary Field
	Alphanumeric Multiple-value Field
	Periodic Group
	Hex Constant
	Dynamic Input Field

Result Field	Operand
	Text String (Alphanumeric Constant)
	Blank

Any text or blanks that are to be inserted between the field values must be enclosed between single quotation marks. Any hexadecimal values to be inserted must be enclosed between single quotation marks and preceded by H.

Note: If your keyboard does not have the vertical bar character, your system administrator will tell you which character to use.

Example:

```
RESULT-FIELD = START-HARBOR | START-DATE
```

results in the field `RESULT-FIELD` having the following contents:

```
MARMARIS19910729
```

where MARMARIS is the current value of the field `START-HARBOR` and 19910729 is the current value of the field`START-DATE`.

Example:

```
RESULT-FIELD = SURNAME | ', ' | FIRST-NAME-1
```

results in the field `RESULT-FIELD` having the following contents:

```
BAKER,PAULINE
```

where BAKER is the current value of the field `SURNAME` and PAULINE is the current value of the field `FIRST-NAME-1`.

Arithmetic Operations with Date and Time

With formats D (date) and T (time), only addition and subtraction are allowed; multiplication and division are not allowed.

Date/time values can be added to/subtracted from one another; or integer values (no decimal digits) can be added to/subtracted from date/time values. Such integer values can be contained in fields of formats N, P, I, D, or T.

An integer value added to/subtracted from a date value is assumed to be in days. An integer value added to/subtracted from a time value is assumed to be in tenths of seconds.

For arithmetic operations with date and time, certain restrictions apply, which are due to the Natural's internal handling of arithmetic operations with date and time, as explained below.

Internally, Natural handles an arithmetic operation with date/time variables as follows:

```
COMPUTE result-field= operand1+/-operand2
```

The above statement is resolved as:

- intermediate-result=operand1+/-operand2
- result-field=intermediate-result

That is, in a first step Natural computes the result of the addition/subtraction, and in a second step assigns this result to the result field.

More complex arithmetic operations are resolved following the same pattern:

```
COMPUTE result-field = operand1+/- operand2+/- operand3+/- operand4
```

The above statement is resolved as:

- intermediate-result1=operand1+/-operand2
- intermediate-result2=intermediate-result1+/-operand3
- intermediate-result3=intermediate-result2+/-operand4
- result-field=intermediate-result3

The internal format of such an intermediate-result depends on the formats of the operands, as shown in the tables below.

In the tables below, D*i* is a value in internal date format; T*i* is a value in internal time format; such values can be used in further arithmetic date/time operations, but they cannot be assigned to a result field of format D (see the assignment table below).

In complex arithmetic operations in which an intermediate result of internal format D*i* or T*i* is used as operand in a further addition/subtraction, its format is assumed to be D or T respectively.

The following table shows the format of the intermediate-result of an addition (intermediate-result=operand1+operand2):

Format of operand1	Format of operand2	Format of intermediate-result
D	D	D*i*
D	T	T
D	N P I	D
T	D T N P I	T
N P I	D	D
N P I	T	T

The following table shows the format of the intermediate-result of a subtraction (intermediate-result=operand1-operand2):

Format of operand1	Format of operand2	Format of intermediate-result
D	D	D *i*
D	T	T *i*
D	N P I	D
T	D T	T *i*
N P I	D	D *i*
N P I	T	T *i*

The following table shows which intermediate results can internally be assigned to which result fields (result-field=intermediate-result).

Format of result-field	Format of intermediate-result	Format of possible
D	D T	yes
D	D *i* T *i* N P I	no
T	D T D *i* T *i* N P I	yes
N P I	D T D *i* T *i* N P I	yes

A result field of format D or T must not contain a negative value.

Examples 1 and 2 (invalid):

```
COMPUTE DATE1 (D) = DATE2 (D) + DATE3 (D)
```

```
COMPUTE DATE1 (D) = DATE2 (D) - DATE3 (D)
```

These operations are not possible, because the intermediate result of the addition/subtraction would be format D*i*, and a value of format D*i* cannot be assigned to a result field of format D.

Examples 3 and 4 (invalid):

```
COMPUTE DATE1 (D) = TIME2 (T) - TIME3 (T)
```

```
COMPUTE DATE1 (D) = DATE2 (D) - TIME3 (T)
```

These operations are not possible, because the intermediate result of the addition/ subtraction would be format T*i*, and a value of format T*i* cannot be assigned to a result field of format D.

Example 5 (valid):

```
COMPUTE DATE1 (D) = DATE2 (D) - DATE3 (D) + TIME3 (T)
```

This operation is possible. First, DATE3 is subtracted from DATE2, giving an intermediate result of format D*i*; then, this intermediate result is added to TIME3, giving an intermediate result of format T; finally, this second intermediate result is assigned to the result field DATE1.

If a format T value is assigned to a format D field, you must ensure that the time value contains a valid date component.

Logical Conditions Editor

You use the Logical Conditions Editor to define logical condition statements using IF, THEN and ELSE clauses. You can define multiple logical condition statements.

To use the Logical Conditions Editor

- Issue the `LOGIC` command.

  The Logical Conditions Editor appears:

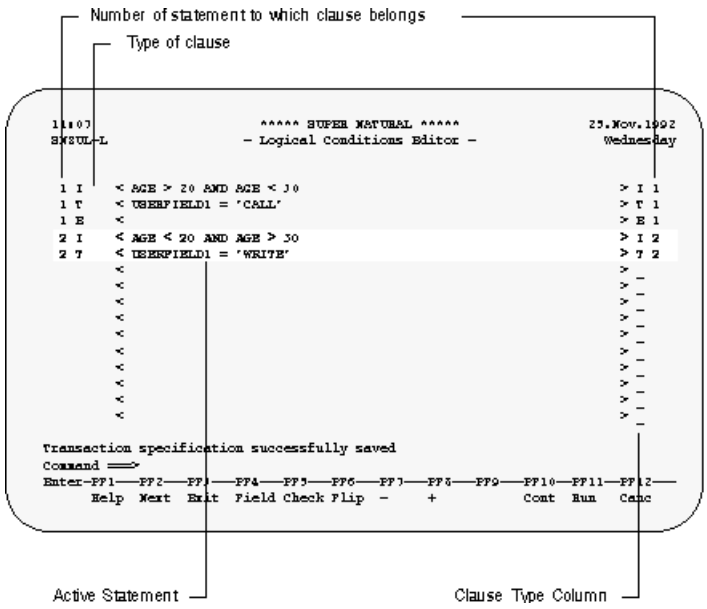

  There are three types of lines in the Logical Conditions Editor. Entries made in the I lines are interpreted as IF clauses, entries made in the T lines are interpreted as THEN clauses and entries made in the E lines are interpreted as ELSE clauses. Every logical condition statement must start with an IF clause.

You can only edit the active statement. The active statement is highlighted and the rest of the editor area is protected. If you want to edit another statement, you must activate it first.

To activate a statement

1 Position the cursor in the statement you want to activate.
2 Press Enter.

The statement is now highlighted and you can edit it.

When you invoke the Logical Conditions Editor, one line of each type is available. If a clause is longer than one line, you must create a new line of the same type for the remainder.

To create a new line of same type

- Use the `.I` or `.C` editor command as described earlier in this section.

To change the line type

1 Position the cursor in the Clause Type column next to the line whose type you want to change.
2 Overtype the present entry with the letter of the required clause type.
3 Press Enter.

To start a new statement

1 Activate the last statement.
2 Enter an I in the Clause Type column below the last entry.

Every logical condition statement must start with an IF clause.

A line for the IF clause of a new statement is created and numbered accordingly.

A new statement is only started if the previous statement contains a THEN or an ELSE line.

Continue Function

As in the Selection and Calculation Editors, you use the `Continue` function to obtain information on what you can enter next.

The `Continue` function in the Logical Conditions editor differs from the Continue function in the other full-screen editors in the following cases:

- When writing the first statement

If the IF or THEN clause is complete as it stands, you get information on the next clause type. If you want information on the same clause type, enter any non-blank character before invoking the `Continue` function.

- When the statement(s) contain errors

  The `CONTINUE` function gives you information on how to correct the errors.

If you want information on what you can enter in the next line type in the second and subsequent statements, you must create a blank line of that type before invoking the `Continue` function.

Logical Condition Statements

You can define logical condition clauses in the following combinations:

Condition Combination	Interpretation
IF x THEN y	If condition x is fulfilled, then do y.
IF x THEN y ELSE z	If condition x is fulfilled, then do y, otherwise do z.
IF x ELSE z	Ignore records where condition x is fulfilled, for all other records do z.

For information on using dynamic input fields, see ***Operators*** in *Selection Editor*.

IF Clause

IF clauses are constructed the same way as selection statements with the following exceptions:

- You can use user fields and dynamic input fields as well as database fields to start the statement.
- You may not use the START operator.
- You can use user fields and database fields as well as dynamic input fields and constants after an operator.

You create IF clauses as follows:

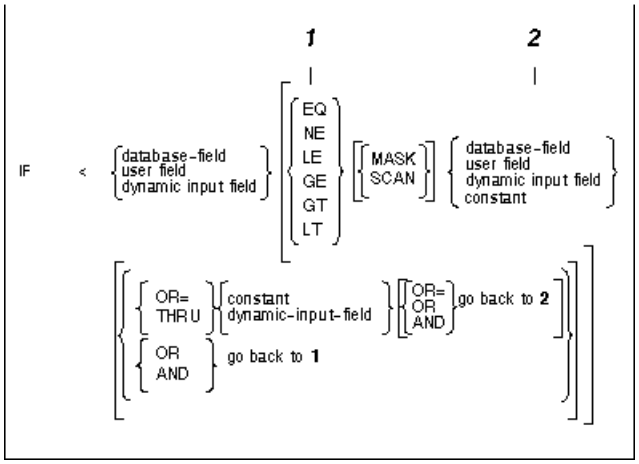

This documentation uses the Natural syntax conventions which are described in the Preface.

Note: The `Continue` function tells you exactly what you can enter in the situation you are in.

For further information on selection statements, see ***Selection Editor***.

THEN Clause

THEN clauses are constructed the same way as calculation statements with the following exceptions:

- You can use the `ACCEPT` and `REJECT` keywords
- You can use the `STOP` keyword.

For further information on calculation statements, see ***Calculation Editor***.

ACCEPT and REJECT Keywords

You use the `ACCEPT` and `REJECT` keywords as follows:

```
I < x
T < {ACCEPT}
    {REJECT}
```

Note: If you use `ACCEPT` or `REJECT`, you may use nothing else in the THEN clause and you may not define an ELSE clause after it.

Condition	Interpretation
IF x THEN ACCEPT	Accept all records where condition x is fulfilled
IF x THEN REJECT	Reject all records where condition x is fulfilled

Note: You can use fields from the lookup file with the `ACCEPT` and `REJECT` keywords.

STOP Keyword

You use the `STOP` keyword as follows:

```
I < x ↩
T < STOP
```

Note: If you use the `STOP` keyword, you may use nothing else in the THEN clause and you may not define an ELSE clause after it.

Condition	Interpretation
IF x THEN STOP	If condition x is fulfilled, stop processing.

ELSE Clause

The ELSE statement is the same as the calculation statement.

For further information on calculation statements, see *Calculation Editor*.

Note: The `Continue` function tells you exactly what you can enter in the situation you are in.

SQL SELECT Editor

You use the SQL SELECT Editor for entering SQL (Structured Query Language) SELECT statements for reporting transactions with the reporting mode Data Selection SQL-SELECT. (For further information on reporting modes, see *Defining Transaction Modes for Reporting*). You must enter selection criteria using SQL (Structured Query Language) SELECT statements. Selection criteria tell Super Natural which data you want from the database.

Users of the SQL SELECT Editor must already be familiar with SQL.

Note: The `CONTINUE` command is not available in the SQL SELECT Editor.

To use the SQL SELECT Editor

1 Issue the `SELECTION` command.

The SQL Editor appears:

```
15:41                      ***** Super Natural *****                05.Jan.1993
SNZUL-Q                      - SQL SELECT Editor -                      Tuesday
                                                                              ↩
                                                                              ↩
      1  < SELECT ENAME, CITY, AGE, SEX                                >    1
      2  < INTO ENAME, CITY                                            >    2
      3  < FROM EZA-EMPLOYEES                                          >    3
      4  <                                                             >    4
      5  <                                                             >    5
      6  <                                                             >    6
      7  <                                                             >    7
      8  <                                                             >    8
      9  <                                                             >    9
     10  <                                                             >   10
     11  <                                                             >   11
     12  <                                                             >   12
     13  <                                                             >   13
     14  <                                                             >   14
     15  <                                                             >   15
                                                                              ↩

NAT0673 Number of SELECT-list and INTO-list elements do not match.            ↩

Command ===>                                                                  ↩

Enter-PF1---PF2---PF3---PF4---PF5---PF6---PF7---PF8---PF9---PF10--PF11--PF12---
      Help  Next  Exit  Field Check Flip  -     +           Table Run   Canc ↩
```

2 Enter your selection criteria using SQL SELECT statements.

You can use the following types of clause in the SQL SELECT Editor:

- SELECT (mandatory)
- INTO (mandatory)
- FROM (mandatory)
- WHERE (optional)
- GROUP BY (optional)
- HAVING (optional)
- ORDER BY (optional)
- UNION (optional)

For information on the optional clauses, see the *Natural Reference* documentation or other SQL documentation.

The following sections describe how to create the SELECT, INTO and FROM clauses covering aspects specific to Super Natural.

SELECT Clause

The SELECT clause is used to define output columns for the result table and can contain fields from DB2 tables, text strings and arithmetic expressions.

You can either enter the names of the fields you want to select directly, or you can use the `TABLES` function to help you.

Note: You must separate column names with a comma (,).

To enter fields directly

- Enter the names of the fields you want use.

To enter fields using the `TABLES` command

1. Issue the `TABLES` command to obtain a list of the DB2 tables you are authorized to use.

   The File Selection List window appears listing the DB2 tables available.
2. Select a DB2 table.

   The Field Selection List window appears showing the fields available in the DB2 table.
3. Select the fields you want to use in the SELECT clause.

   At this point, you can also choose to automatically generate user fields to match the DB2 fields you have selected as described below.

   The user fields have the same name, format and length as their counterpart and can be used in the INTO clause.

To automatically generate user fields to match the DB2 fields you have selected in the Field Selection List window

1. Mark the `Generate` field provided in the Field Selection List window.
2. Press Enter.

   The field names appear in the SELECT clause line and if you have marked the `Generate` field, user fields are generated to match and appear in the Fieldname column in the Worksheet.

INTO Clause

Every output column defined in the SELECT clause must have a user field of like format and length in the INTO clause. Only the first SELECT clause needs a corresponding INTO clause.

Note: You must separate user field names with a comma (,).

You can either generate the user fields automatically as described above or enter the names directly. If you enter the name of a non-defined field, you must define it later in the Define User Field window which appears when you issue the `CHECK` command or leave the SQL Editor with `EXIT`. You can also define user fields from the Worksheet.

To obtain a list of the user fields you can use

- Issue the `FIELDS` command.

  A selection list of the user fields which are already in theFieldname column of the Worksheet appears. The field list is empty if no user fields are defined.

For information on the interpretation of null values, see the section *INDICATOR/LINDICATOR* in the description of SQL SELECT statements in the *Natural Reference* documentation.

FROM Clause

The name of every DB2 table which you want to use in the `SELECT` statement must appear in the FROM clause. You can use the TABLES function to remind you of the DB2 tables available but you cannot use it to enter the table names in the editor for you.

Issuing the TABLES and FIELDS Commands

Before you issue the `TABLES` or `FIELDS` command, you must press Enter and position the cursor to where fields can be inserted using the arrow keys (not the space bar). You can issue the `TABLES` and `FIELDS` commands either by entering them in the command line or by pressing the relevant PFkey.

Note: The `FIELDS` command is allocated to PF4. The `TABLES` command is allocated to PF10.

SQL Help Routine

As well as the general editor help available in all editors, the SQL SELECT Editor has its own SQL-specific help routine which gives information on each of the types of clause available.

To access the SQL Help Routine

1 Position the cursor inside the editor area.

2 Press PF1.

The menu for the SQL Help Routine window appears:

```
15:42                      ***** Super Natural *****                05.Jan.1993
SHSQL                    - SQL Select - Help Routine -                  Tuesday
                                                                              ↩
                                                                              ↩
     +---------------+         +-------------+         +------------------+  ↩
     I SELECT-Clause I         I FROM-Clause I         I WHERE-Clause     I  ↩
     +---------------+         +-------------+         +------------------+  ↩
     +---------------+                                 +------------------+  ↩
     I INTO-Clause   I                                 I GROUP BY -Clause I  ↩
     +---------------+                                 +------------------+  ↩
                                                       +------------------+  ↩
                                                       I HAVING-Clause    I  ↩
                                                       +------------------+  ↩
                                                       +------------------+  ↩
                                                       I ORDER BY -Clause I  ↩
                                                       +------------------+  ↩
                                                       +------------------+  ↩
                                                       I UNION-Clause     I  ↩
                                                       +------------------+  ↩
                                                                              ↩
                                                                              ↩
Command ===>                                                                  ↩
Enter-PF1---PF2---PF3---PF4---PF5---PF6---PF7---PF8---PF9---PF10--PF11--PF12---
                  Exit              Flip                                Canc ↩
```

Each section in the SQL Help Routine window represents a help sub-system.

To access a help sub-system

1 Position the cursor at the sub-system you require.

   Use the carriage return key or tabs to do this, not the arrow keys.

2 Press Enter.

   Marking options takes you to further help windows, the `CANCEL` command takes you to the last window and the `EXIT` command you takes you back to the SQL- SELECT Editor from any point within the SQL help routine.

PC File Description Editor

When you are adding a reporting transaction with the transaction mode `Data Selection` set to DATA FROM PC FILE, you must use the PC File Description Editor to describe the file layout of the file you are using.

To invoke the PC File Description Editor

1 Issue the `SELECTION` command.

```
15:44                     ***** Super Natural *****               05.Jan.1993
SNZUL-WF              - PC File  Description Editor -                 Tuesday
                                                                            ↩

            Fieldname                           Format  Length  Dec.Places  ↩

       1  <                                 >                                ↩

       2  <                                 >                                ↩

       3  <                                 >                                ↩

       4  <                                 >                                ↩

       5  <                                 >                                ↩

       6  <                                 >                                ↩

       7  <                                 >                                ↩

       8  <                                 >                                ↩

       9  <                                 >                                ↩

      10  <                                 >                                ↩

      11  <                                 >                                ↩

      12  <                                 >                                ↩

      13  <                                 >                                ↩

      14  <                                 >                                ↩

      15  <                                 >                                ↩

                                                                            ↩

                                                                            ↩

Command ===>                                                                ↩

Enter-PF1---PF2---PF3---PF4---PF5---PF6---PF7---PF8---PF9---PF10--PF11--PF12---
      Help  Next  Exit        Check Flip  -     +                 Run   Canc ↩
```

2 Enter the name of the fields to be read from the PC file, their format and length in the relevant columns.

To prevent errors when the transaction is run, the following restrictions are applied to the editor area as soon as one or more fields are used elsewhere in the transaction:

- You cannot enter new fields
- You cannot delete fields
- You cannot change the field order
- The fields used elsewhere in the transaction are locked
- Fields only used in the editor can only be edited

The availability of line commands and editor direct commands are restricted accordingly.

Note: To lift the restrictions, remove all fields from use in the transaction, for example from the Worksheet, any other editor or in a prototype program. The Info column in the Worksheet provides you with information on field usage.

Work File Description Editor

When you are adding a reporting transaction with the transaction mode `Data Selection` set to DATA FROM WORK FILE, you must use the Work File Description Editor to describe the file layout of the file you are using.

To invoke the Work File Description Editor

- Issue the `SELECTION` command.

```
15:45                     ***** Super Natural *****               05.Jan.1993
SNZUL-WF              - Work File Description Editor -                Tuesday
                                                                            ↩

            Fieldname                           Format  Length  Dec.Places  ↩

       1  <                                 >                                ↩

       2  <                                 >                                ↩

       3  <                                 >                                ↩

       4  <                                 >                                ↩

       5  <                                 >                                ↩

       6  <                                 >                                ↩

       7  <                                 >                                ↩

       8  <                                 >                                ↩

       9  <                                 >                                ↩

      10  <                                 >                                ↩

      11  <                                 >                                ↩

      12  <                                 >                                ↩

      13  <                                 >                                ↩

      14  <                                 >                                ↩

      15  <                                 >                                ↩

                                                                             ↩

                                                                             ↩

Command ===>                                                                 ↩

Enter-PF1---PF2---PF3---PF4---PF5---PF6---PF7---PF8---PF9---PF10--PF11--PF12---
      Help  Next  Exit        Check Flip  -     +                Run   Canc ↩
```

Enter the name of the fields to be read from the work file, their format and length in the relevant columns. To prevent errors when the transaction is run, the following restrictions are applied to the editor area as soon as one or more fields are used elsewhere in the transaction:

- You cannot enter new fields

- You cannot delete fields
- You cannot change the field order
- The fields used elsewhere in the transaction are locked
- Fields only used in the editor can only be edited

The availability of line commands and editor direct commands are restricted accordingly.

Note: To lift the restrictions, remove all fields from use in the transaction, for example from the Worksheet, any other editor or in a prototype program. The Info column in the Worksheet provides you with information on field usage.

User File Description Editor

When you are performing the `Add Userfile` function, you use the User File Description Editor to describe the layout of the user file you are creating by adding, modifying and/or deleting field descriptions. For further information on the User File Description Editor, see ***Working with User Files***.

Arrays

Referencing Occurrences/Arrays

Multiple-Value Fields and Periodic Groups

When you need to deal with a particular occurrence of a multiple-value field or a periodic group, you must give it a reference number or index as shown below:

```
fieldname {(occurrence-no.-periodic-group)      }
          {(occurrence-no.-multiple-value-field)}
```

Example:

The following refers to the first occurrence of the multiple-value field `EXTRAS` in the demo file *E-SAG-TOURS-CH-PRICES*:

```
EXTRAS(1)
```

Multiple-Value Field or Periodic Group Within a Periodic-Group

Two reference numbers are required to reference an occurrence of a multiple-value field within a periodic group as shown below:

```
fieldname(occurrence-no.-PG,occurrence-no.-MU)
```

where PG is periodic group and MU is multiple-value field.

The first number indicates which occurrence of the periodic group it is in and the second number indicates which occurrence of the multiple-value field it is. Separate the reference numbers with a comma (,) and enclose them within parentheses(()).

Example:

The following refers to the third occurrence of the multiple-value field `LANGUAGES`, contained in the second occurrence of the periodic group SAILOR in the demo file *E-SAG-TOURS-CRUISE*:

```
LANGUAGES(2,3)
```

For further information on multiple-value fields and periodic groups, see ***Field Types*** in *Defining Fields*.

Array Processing

All scalar operations can be applied to array elements which consist of a single occurrence.

Assignment Operations with Arrays

If an array range is assigned to another array range, the assignment is performed element by element.

If a single occurrence is assigned to an array range, each element of the range is filled with the value of the single occurrence. (For a mathematical function, each element of the range is filled with the result of the function.)

Before an assignment operation is executed, the individual dimensions of the arrays involved are compared with one another to check if they meet one of the conditions listed below. The dimensions are compared independently of one another; that is, the 1st dimension of the one array is compared with the 1st dimension of the other array and the 2nd dimension of the one array is compared with the 2nd dimension of the other array.

The assignment of values from one array to another is only allowed under one of the following conditions:

- The number of occurrences is the same for both dimensions compared.

- The dimension that is assigned to another dimension consists of a single occurrence.

Sample Array Assignments:

```
FIELD1(1:3)  = FIELD2(6:8)
FIELD3(1,1:3)  = FIELD4(6:8)
FIELD5(1:3,3:5) = FIELD6(1:3,1:3)
```

Comparison Operations with Arrays

Generally, the following applies: if arrays with multiple dimensions are compared, the individual dimensions are handled independently of one another. The 1st dimension of the one array is compared with the 1st dimension of the other array and the 2nd dimension of the one array is compared with the 2nd dimension of the other array.

The comparison of two array dimensions is only allowed under one of the following conditions:

- The array dimensions compared with one another have the same number of occurrences.
- The array dimensions compared with one another have an indefinite number of occurrences.

Note: Only in the IF clause of the Logical Conditions editor.

- All array dimensions of one of the arrays involved are single occurrences.

The following sample shows which array comparison operations are possible:

Sample Array Comparisons:

```
IF A2(1,1) = A1(1) THEN ACCEPT
IF A2(1,*) = A1(1) THEN STOP
IF A2(1,*) = A1(*) THEN ACCEPT
IF A2(1,1) = A2(1,1) THEN REJECT
```

Comparing Two Array Ranges:

Example:

```
IF #ARRAY1(1:2) NE #ARRAY2(1:2)
```

The above condition is fulfilled if the first occurrence of #ARRAY1 does not equal the first occurrence of #ARRAY2 *and* the second occurrence of #ARRAY1 does not equal the second occurrence of #ARRAY2.

This is equivalent to the following expression:

```
IF (#ARRAY1(1) NE #ARRAY2(1)) AND (#ARRAY1(2) NE #ARRAY2(2))
```

Arithmetic Operations with Arrays

Array ranges can be specified in the following ways:

- `ADD` *`range`* **TO** *`range`* `GIVING` *`range`*
  Range dimensions must be equal. `ADD` is performed element by element.
- `MULTIPLY` *`range`* **BY** *`range`* `GIVING` *`range`*
  Range dimensions must be equal. `MULTIPLY` is performed element by element.
- `ADD` *`scalar`* **TO** *`range`* `GIVING` *`range`*
  Range dimensions must be equal. Scalar is added to each element of range.
- `MULTIPLY` *`range`* **BY** *`scalar`* `GIVING` *`range`*
  Range dimensions must be equal. Each element of range is multiplied by scalar.
- `ADD` *`range`* **TO** *`scalar`* `GIVING` *`scalar`*
  Each element of the array is added to scalar and the result is stored in scalar.
- `MULTIPLY` *`scalar`* **BY** *`range`* `GIVING` *`scalar2`*
  Scalar is multiplied by each element of the array and the result is assigned to scalar2.

11 Working with Natural Report Manager

- What is Natural Report Manager? 188
- When is a Default Layout Generated? 189
- Invoking Natural Report Manager 190
- Issuing Commands 190
- Navigating Within Natural Report Manager 191
- Natural Report Manager PF Keys 193
- Layout Overview Screen 194
- Layout Editor Screens 196
- Layout Editor Editor Area 203
- Display Layout Element Screen 213
- Layout Field List Screen 214
- Extended Field Editing Window 215
- Array Editing Window 218
- Layout Settings 219
- Testing Layouts 221
- Elements 221

This section describes Natural Report Manager. Each screen available in Natural Report Manager is described. The sections *Navigating Within Natural Report Manager* and *Navigating Between the Layout Editor Screens* tell you how to navigate between the main screens.

This section covers the following topics:

- **What is Natural Report Manager?**
- **When is a Default Layout Generated?**
- **Invoking Natural Report Manager**
- **Issuing Commands**
- **Navigating Within Natural Report Manager**
- **Natural Report Manager PF Keys**
- **Layout Overview Screen**
- **Layout Editor Screens**
- **Layout Editor Editor Area**
- **Display Layout Element Screen**
- **Layout Field List Screen**
- **Extended Field Editing Window**
- **Array EditingWindow**
- **Layout Settings**
- **Testing Layouts**
- **Elements**

What is Natural Report Manager?

Natural Report Manager is a tool which is available within Super Natural for editing the layout of reports.

You can create and edit the following layout elements:

- Preface
- Title
- Header
- List
- Groups
- Appendix

- Footer

Natural Report Manager generates a default layout for every Super Natural report. The type and number of layout elements generated by default depend on the entries you have made on the Worksheet and on the transaction mode. For example, when you define control breaks, a layout element of the type group is generated for each one and when you are using reporting mode Destination WORK FILE, only a title is generated. If you change the transaction modes of a transaction which already has a layout, the elements not relevant to the new mode can only be displayed not edited.

A standard Title element is supplied with Super Natural which contains the system variables `TIMX`, `DATX`, `PROGRAM` and `PAGE-NUMBER` but your administrator may change this.

Natural Report Manager is structured as shown in the following diagram:

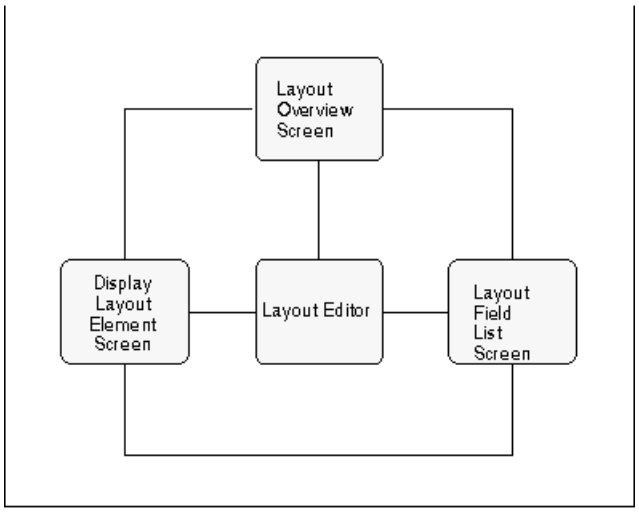

When is a Default Layout Generated?

When you invoke Natural Report Manager from within a report, a default layout is automatically generated.

The default layout for reporting transactions always contains the layout element Title and can contain other elements according to the current transaction mode.

If you delete default layout elements, they are generated again when you next invoke Natural Report Manager with the following exceptions:

- The Title element is not regenerated unless it is the only default layout element.
- If you delete either the Header element or the List element (not both) from a default layout containing both, the element is not regenerated.

Note: Deleted default layout elements are also regenerated when you save or run the transaction.

Entries made in the Layout Editor override those made in the Sequence column in the Worksheet. When you return to the Worksheet, you cannot use the Sequence column until you delete the elements list and header. Fields which have been used in the Layout Editor are marked with an L.

If you add a transaction without invoking Natural Report Manager, a default layout is still generated but not until you save or run the transaction. The Sequence column of the Worksheet is not effected if you do not invoke Natural Report Manager.

Invoking Natural Report Manager

You can invoke Natural Report Manager from any point within a transaction you are creating or modifying.

To invoke Natural Report Manager

- Issue the `LAYOUT` command.

  The Layout Overview screen appears.

Note: Your administrator may change your user profile so that the Layout Editor takes the place of the Layout Overview screen in the diagram. The Layout Editor is then the first screen to appear when you invoke Natural Report Manager.

Issuing Commands

There are three ways of issuing commands in Natural Report Manager.

Using the Command Line

You can enter commands directly in the command line.

To issue a command directly

1. Type the command in the command line.
2. Press Enter.

Using the Command Line and the Cursor Position

In the Layout Overview screen, the Layout Editor split-screen with information sections and the Layout Editor editor area you can issue commands using the command line and cursor position.

To issue a command using the command line and cursor position

1 Type the command in the command line.

2 Position the cursor in the layout element box or section you want the command to act on.

3 Press Enter.

Using the Cursor Position and a PF Key

In the Layout Overview screen, the Layout Editor split-screen with information sections and the Layout Editor editor area you can issue commands using the cursor position and a PF key.

To issue a command using the cursor position and a PF key

1 Position the cursor in the layout element box or section you want the command to act on.

2 Press the relevant PF key.

Navigating Within Natural Report Manager

The following diagram shows the commands needed for navigation within Natural Report Manager:

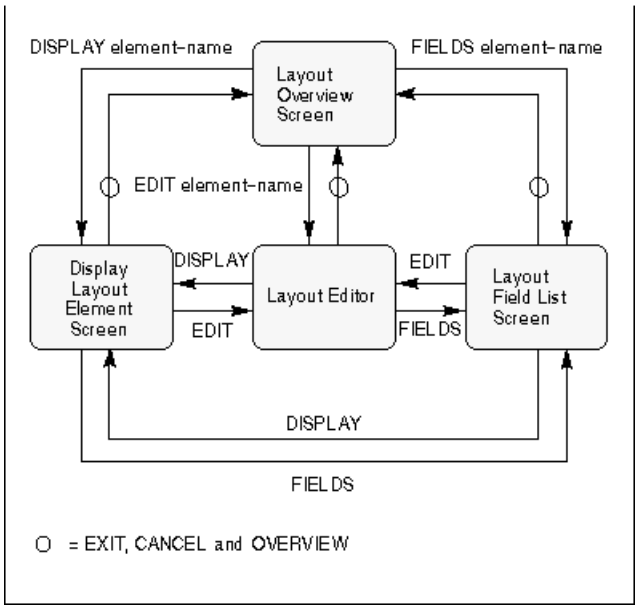

OVERVIEW Command

The OVERVIEW command invokes the Layout Overview screen from the Display Layout Element screen, Layout Editor and Layout Field List screens.

EXIT and CANCEL Commands

The EXIT and CANCEL commands function as described in the section PF keys in the section Using Super Natural.

However, you should note the following:

If you issue the CANCEL command from the Layout Overview screen, you leave Natural Report Manager and return to Super Natural. The layout is returned to the version which existed before you invoked Natural Report Manager and you lose any changes made since.

If you issue the EXIT command from the Layout Overview screen, you leave Natural Report Manager and return to Super Natural. When you keep, save or run the transaction, the current version of the layout is kept or saved.

DISPLAY, EDIT and FIELDS Commands

The DISPLAY, EDIT and FIELDS commands invoke the Display Layout Element screen, Layout Editor and Layout Field List screens respectively for the layout element you specify or for the layout element you are working with.

With an Element Name

If you want to work with a layout element, you can issue the DISPLAY, EDIT and FIELDS commands with an element name.

To process a layout element

- Issue one of the following commands from the Display Layout Element screen, Layout Editor or Layout Field List screen:
  - DISPLAY element-name
  - EDIT element-name
  - FIELDS element-name

With No Element Name

Once you are working with a layout element, the commands DISPLAY, EDIT and FIELDS act upon it until otherwise specified.

The ALL Keyword

The ALL keyword allows you to process all the elements of a layout together.

To process all the elements of a layout together

- Issue one of the following commands:
  - `DISPLAY ALL`
  - `EDIT ALL`
  - `FIELDS ALL`

  Note: You cannot issue the `FIELDS ALL` and `EDIT ALL` commands if one or more layout elements are protected.

  When you have all elements in the editor area, all elements are affected by the line and field commands you then issue.

The `Asterisk (*) List` Function

The `Asterisk List` function provides you with a list of elements available with a certain command.

To invoke a selection list of elements, which you can display, edit or see the field list for

- Issue one of the following commands:
  - `DISPLAY *`
  - `EDIT *`
  - `FIELDS *`

Natural Report Manager PF Keys

The following table shows the default PF key allocation in Natural Report Manager. These PF key allocations are additional to the standard allocations described in the section *Using Super Natural* earlier in this documentation.

PF Key	Allocation	Section Documented
PF2	SETTINGS	Layout Settings
PF4	FIELDS	Navigating Within Natural Report Manager
PF5	EDIT	Navigating Within Natural Report Manager
PF13	TEST	Testing Layouts
PF14	DISPLAY	Navigating Within Natural Report Manager
PF16	SECTION	The Layout Editor Screens
PF17	SHOW	The Layout Editor Screens
PF18	FULL	The Layout Editor Screens

Layout Overview Screen

The Layout Overview screen shows which elements are already present in the layout.

If an element is outlined with a dotted line, you may not edit it.

In the example below, the element types for a simple report are present.

```
12:34                    *** NATURAL REPORT MANAGER ***              07.Dec.1992
NRMPAGE                        - Layout Overview -                       Monday

                     +-------------------------------------+
                     I                 Title               I
                     +-------------------------------------+
                     +-------------------------------------+
                     I                Header               I
                     I                                     I
                     +-------------------------------------+
                     +-------------------------------------+
                     I                 List                I
                     I                                     I
                     I                                     I
                     I                                     I
                     I                                     I
                     I                                     I
                     I                                     I
                     I                                     I
                     +-------------------------------------+

Command ===>
Enter-PF1---PF2---PF3---PF4---PF5---PF6---PF7---PF8---PF9---PF10--PF11--PF12---
      Help  Set   Exit  Field Edit  Flip              Tech              Canc
```

Invoking the Field List for, Displaying and Editing Elements

To display, edit or invoke the field list for an element

- Issue a direct command as described in the section *Navigating within Natural Report Manager*.

Deleting Elements

To delete a layout element

- Issue the `DELETE element-name` command.

ALL Parameter

The `ALL` parameter allows you to delete all the elements of a layout at once.

To delete all the elements of a layout at once

- Issue the `DELETE ALL` command.

  The Confirm Multiple Delete window appears where you can select between confirming each deletion, deleting without confirmation or cancelling the deletion.

Note: The `DELETE ALL` command is not available if an element in the layout is protected.

The `Asterisk (*) List` Function

The `Asterisk List` function provides you with a list of the elements available with a certain command.

To invoke a selection list of elements which you can delete

- Issue the `DELETE *` command.

Creating Elements

To create a new layout element

- Issue the `EDIT element-name` command.

Select Function Window

The Select Function window displays a selection list of the functions available from the Layout Overview screen.

To invoke the Select Function window

1 Position the cursor in the layout element you want to process.

2 Press Enter.

Layout Editor Screens

There are three ways of displaying the Layout Editor.

- Editor area with information sections
- Editor area with show area
- Editor area with full screen

Navigating Between the Layout Editor Screens

The following diagram shows the commands you need to navigate within the Layout Editor:

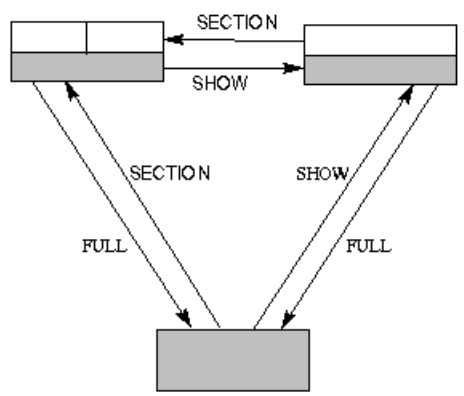

Editor Area with Information Sections

When you invoke the Layout Editor from the Layout Overview screen for the first time, it consists of three sections as shown in the diagram below:

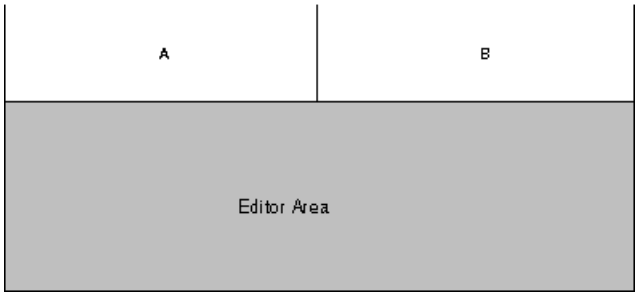

Section A and section B display information about the transaction fields and field delimiters you can use. You can decide which information you want to be displayed in which information section. The editor area is where you edit layout elements and is described later in this section.

To invoke the editor area with information sections

- Issue the `SECTION` command from within the Layout Editor.

  A screen similar to the following appears:

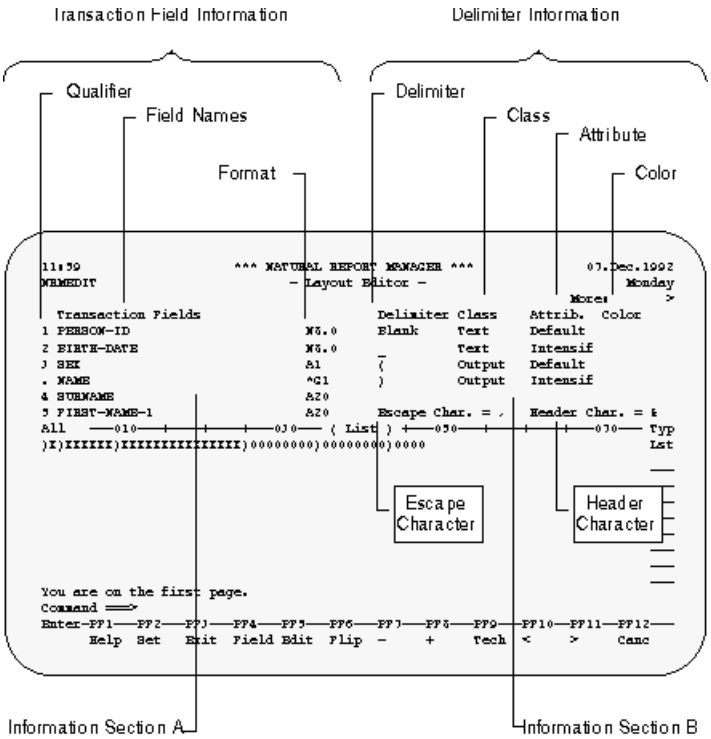

Transaction Field Information

Transaction field information lists the fields in the file or files you chose when creating the transaction. Transaction field information also lists any system variables and user fields used in the transaction.

Qualifier

Every field which you can use in the Layout Editor has a qualifier (number). Fields which you cannot use, for example group fields and phonetic descriptors are marked with a period (.).

Note: You cannot use superdescriptors, subdescriptors or phonetic descriptors in the Layout Editor if you are using a DL/1 file.

Field Format

The format of each field is shown to the right of the transaction field list. You can shift the field format information further to the right until it is no longer visible. This is useful, if for example, the field names are truncated.

To shift the field format information to the right

1. Position the cursor in the section displaying transaction field information.
2. Issue the `>` or `RIGHT` command until the information becomes invisible.

To shift the field format information to the left

1. Position the cursor in the section displaying transaction field information.
2. Issue the `<` or `LEFT` command until the information becomes visible.

Delimiter Information

Delimiter information lists the field delimiters available. Field delimiters are symbols which represent a combination of field class, field attributes and field color. You use field delimiters to determine what kind of fields are used and how they are displayed.

The delimiter information contains four columns:

Column	Description
Delimiter	The character which indicates a certain delimiter.
Class	There are two classes of field: text fields and output fields. You enter the content of text fields in the Layout Editor. The contents of output fields are supplied dynamically when the transaction is run.
Attrib.	The field attributes govern the type of text used when a field is displayed e.g., blinking (for screen output only), intensified.

Column	Description
Color	Field color is indicated here.

You can create your own field delimiter definitions or modify existing ones. For further information, see *Layout Settings* in *Working with Natural Report Manager*.

Escape Character

The escape character for field and line commands is part of the delimiter information and is displayed next to the header character.

Header Character

The header character is part of the delimiter information and is displayed next to the escape character. You use the header character to generate the header text defined in Super Natural for a field.

When a header layout element is first created, the header texts defined for the fields used in the editor are generated and underlined. If no header text is defined, the field name is generated. However, when you position subsequent fields in the Layout Editor, header text is not automatically generated. You can either type in a header as text or use the header character to generate it.

To generate header text for a field

1 Type in the header character and qualifier for the field.

   You can additionally use a text delimiter between header character and qualifier.

2 Press Enter.

   The header text defined for the field in Super Natural is generated. No underline is generated.

   You can use the header character to generate header text in any layout element.

Changing the Information in Sections A and B

You can choose whether you want to display transaction field and delimiter information in section A or in section B.

If you have long lists of transaction fields or of delimiters, it can be useful to use both A and B to display different parts of the same list.

To change the information in section A or B

- Issue the `section-name information-type` command

  where *`section-name`* is *`A`* or *`B`* and *`information-type`* is `TRANSACTION` or `DELIMITER` as shown below:

```
{ A } {TRANSACTION}
{ B } {DELIMITER  }
```

Paging in Section A and Section B

To page in section A or section B

- Enter the `section-name paging-command` command where *`section-name`* is *`A`* or *`B`* and `paging-command` is one of the Super Natural paging commands or one of those listed below:

Command	Description
+ n	Pages forward n lines
- n	Pages backwards n lines
LINE n	Pages to the line number specified
SCAN fieldname	Pages to the field named (only for the section displaying transaction fields)

```
{ A } paging-command
{ B }
```

You can also issue the paging commands by positioning the cursor in the section you want to page in and using a `PF` key.

Editor Area with Show Area

Instead of the sections A and B, you can display a layout element in the top half of the Layout Editor as shown in the following diagram:

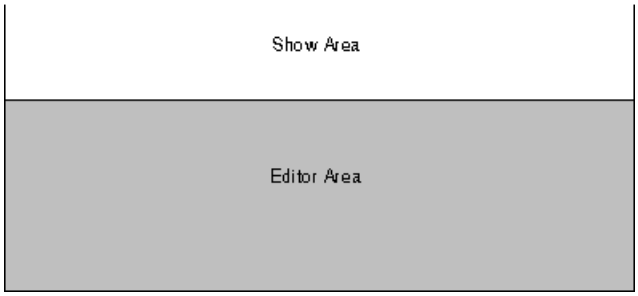

To invoke the show area with the editor area

- Issue the `SHOW` command from within the Layout Editor.

  A screen similar to the following appears:

```
12:35                  *** NATURAL REPORT MANAGER ***             07.Dec.1992
NRMEDIT                         - Layout Editor -                      Monday
                                                                 More:      ↩
>
All   ---010---+----+----+---030-- ( Title ) +---050---+----+----+---070--- Cmd
(XXXXXXXX _SSSSSSSSSSSSSSSSSSSSSSSSSSSSSSSSSSSSSSSSSSSSSSSSSSSSSSSSSSSS(XXX ___
(XXXXXXXX _SSSSSSSSSSSSSSSSSSSSSSSSSSSSSSSSSSSSSSSSSSSSSSSSSSSSSSSSSSSS(999 ___
         _SSSSSSSSSSSSSSSSSSSSSSSSSSSSSSSSSSSSSSSSSSSSSSSSSSSSSSSSSSSSS    ___
                                                                            ___
                                                                            ___
                                                                            ___
All   ---010---+----+----+---030--- ( List ) +---050---+----+----+---070--- Typ
)X)XXXXXX)XXXXXXXXXXXXXXX)00000000)00000000)0000                            Lst
                                                                            ___
                                                                            ___
                                                                            ___
                                                                            ___
                                                                            ___
                                                                            ___
                                                                            ___
                                                                            ___
                                                                              ↩

Command ===>                                                                  ↩

Enter-PF1---PF2---PF3---PF4---PF5---PF6---PF7---PF8---PF9---PF10--PF11--PF12---
      Help  Set   Exit  Field Edit  Flip  -     +     Tech  <     >     Canc ↩
```

Commands in the Show Area

You can perform the following two commands on lines displayed in the show area by entering them in the command column:

Command	Description
..R (text constants only)	Copies text constants from the show area to the cursor position in the editor area
..M (only if layout may be edited	Moves lines from the show area to the cursor position in the editor area

Note: You can copy or move a range of lines by entering the relevant line command in the first line and in the last line.

Apart from using the `..R` and `..M` commands, you cannot edit the element displayed in the show area.

You can use the Super Natural Shift functions, Paging functions or one of the commands listed below for positioning within the layout element displayed in the show area:

Command	Description
>>	Positions to far right of layout
<<	Positions to far left of layout

Displaying Another Layout Element

To display another layout element

- Issue the `SHOW element-name` command.

Editor Area Full-Screen

You can also choose to display the editor area only as shown in the diagram below:

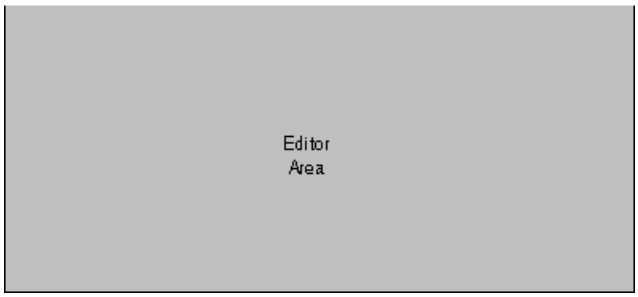

To invoke the editor area only

- Issue the `FULL` command from within the Layout Editor.

  A screen similar to the following appears:

```
)X)XXXXXX)XXXXXXXXXXXXXXX)00000000)00000000)0000                        Lst
                                                                         ____
                                                                         ____
                                                                         ____
                                                                         ____
                                                                         ____
                                                                         ____
                                                                         ____
                                                                         ____
                                                                         ____
                                                                         ____
                                                                         ____
                                                                         ____
                                                                         ____
                                                                         ____
                                                                         ____
                                                                         ____
                                                                         ____
                                                                         ____
All   ---010---+----+----+---030--- ( List ) +---050---+----+----+---070--- Typ
Command ===>                                                              ↩

Enter-PF1---PF2---PF3---PF4---PF5---PF6---PF7---PF8---PF9---PF10--PF11--PF12---
      Help  Set   Exit  Field Edit  Flip  -     +     Tech  <     >     Canc ↩
```

Layout Editor Editor Area

You can use the Layout Editor editor area to position and edit transaction fields and text constants within layout elements either directly or using line commands, field commands and direct commands.

Reports can be up to 250 columns wide and 250 lines long. The editor area is 75 columns wide, 20 lines long in the full-screen Layout Editor screen and 9 lines long in the split-screen Layout Editor screen.

If your report is wider than the editor area, you can use one of the Super Natural Shift functions or one of the commands listed below to position to the right or left in the layout element(s) displayed:

Command	Description
>>	Positions to far right of layout
<<	Positions to far left of layout

If your report is longer than the editor area, you can use the Super Natural paging commands to page within the layout element(s) displayed.

Scale

The scale is a line either at the top or the bottom of the editor area which displays information about the element(s) you are editing.

In the two split-screen Layout Editor screens, the information line separates the editor area from the rest of the screen. In the full-screen Layout Editor screen, the information line is in the message line and is overwritten if a message is displayed.

The scale displays the following information:

Line Position Information

Line position information shows the number of the first line you can see in the editor area. The information ALL (when you can see the whole element), TOP and BOTTOM appear as appropriate.

Element Name

The scale displays the name of the element you are editing or the text All Elements'.

Column Numbers

The scale also shows which columns are displayed. The columns are identified by a three-figure number at intervals of 20 columns. The column itself is underneath the second figure of the number.

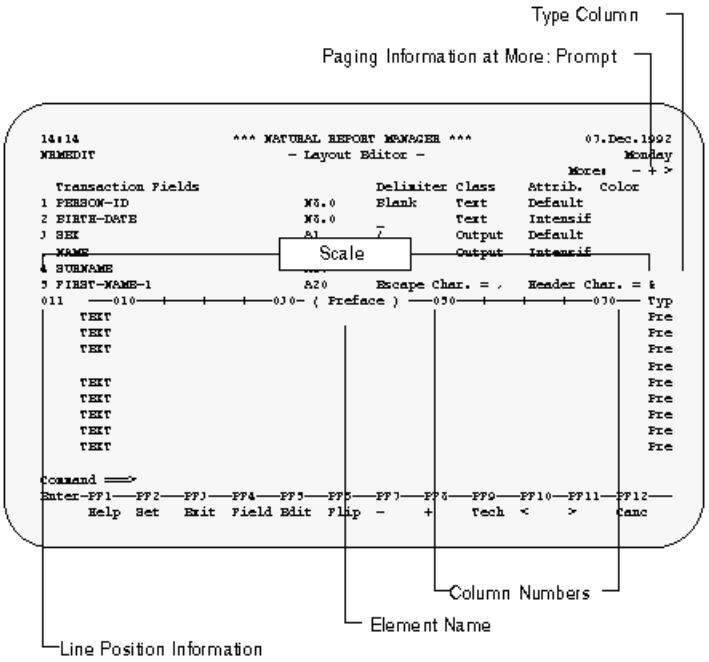

Type Column

The Type (Typ) column contains a three-letter abbreviation showing the layout element type of each line used in the editor area. Blank lines in an element are also marked.

To move the Type column to the other side of the screen

- Issue the `TYPE` command.

Paging Information

The paging information shown after the More: prompt always refers to the editor area when the editor area is displayed.

Positioning Transaction Fields in a Layout Element

Each transaction field qualifier must be preceded by a delimiter of the class OUTPUT.

For further information on delimiters, see *Delimiter Information*.

To position a transaction field in a layout element

1 Position the cursor one position to the left of the column in which you want the field to be displayed.

2 Type in a field delimiter of class OUTPUT.

3 Type the field qualifier (number allocated to the field in the information section) after the field delimiter.

4 Press Enter.

For right-justified fields of numeric (N), integer (I) or packed numeric (P) format, the figure nine (9) appears to represent the full length of the field. For example, if you choose a field of the format N12, twelve 9's appear.

For left-justified fields of numeric (N), integer (I) or packed numeric (P) format, the figure zero (0) appears to represent the full length of the field. For example, if you choose a field of the format N12, twelve 0's appear.

For fields of alphanumeric (A), floating (F), Date (D), time (T) or binary (B) format, the letter X appears to represent the full length of the field. For example, if you choose a field of the format A12, twelve X's appear.

Fields of any type with an edit mask are represented by the letter M.

To alter the position of transaction fields already present in a layout element

- Use the field commands and line commands described later in this section.

Positioning Text Constants in a Layout Element

A text constant is piece of text which always appears in a layout element. You can enter text constants directly into the editor area.

Each text constant must be preceded by a delimiter of the class TEXT.

Note: The default delimiter for text constants is blank ( ).

To alter the position of text constants already present in a layout element

- Use the field commands and line commands described later in this section.

  The first column of the editor area is only for delimiters or commands. You may not position text constants in it.

Line Commands

Line commands influence the editor lines and are structured as follows:

```
escape-characterescape-characterline-command-character
```

The escape character of a line command is entered in the first position of an editor line. You may only enter escape characters or delimiters in this position.

When all elements are in the editor area, all elements are effected by the line and field commands you issue.

Escape Character

The first two characters of each line command are the escape character. The default escape character is a period (.). The escape character defined for you is shown in the Delimiter information which you can invoke in one of the information sections of the split-screen Layout Editor.

Line Command Character

You can use some line command characters in combination with a repetition factor or with a marker.

(Blank)

Entering a blank at the end of each line command prevents the editor from trying to interpret any other information in the editor line as part of the line command.

Issuing Line Commands

To issue a line command

1. Type the first escape character at the first position of an editor line.
2. Type the second escape character at the second position of the editor line.
3. Type the line command character immediately after the second escape character.
4. Type a blank.
5. Press Enter.

   Do not leave a blank between the second escape character and the line command character.

   The following is an example of a correctly-positioned line command:

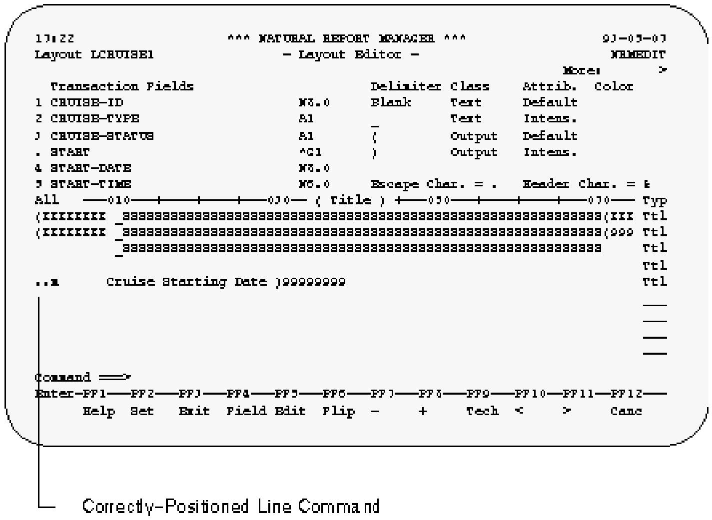

List of Line Commands

The line commands available in the Layout Editor editor area are listed in the following section.

Note: The notation "n" indicates a repetition factor. The default repetition factor is 1. You can enclose the repetition factor in parentheses if you wish.

Note: The line in which you enter the command is referred to as the current line.

Line Command	Description
`..C`	Centers the current line. If you type two `..C` commands and press Enter, the current line is centered. The rest of the lines delimited by the commands are moved the same distance to the right or left as the current line but are not centered.
`..Cn`	Centers the current line and moves the n-1 lines below it the same distance to the right or left but does not center them.
`..C*`	Centers the current line and moves all lines below it the same distance to the right or left but does not center them.
`..D`	Deletes the current line. Two `..D` commands entered on the same screen delete the block of lines between them.
`..Dn`	Deletes the current line and the n-1 lines below it.
`..D*`	Deletes the current line and all lines below it. If the delete operation affects array elements the array is deleted in total.
`..E`	Invokes the Layout Field List screen for all the fields contained in the line. You can then perform extended field editing on the fields displayed. If you type two `..E` commands and press Enter, the Layout Field List screen appears for all fields within the range of lines delimited by the commands.

Line Command	Description
`..En`	Invokes the Layout Field List screen for the current line and the n-1 lines below it. You can then perform extended field editing on the fields displayed.
`..E*`	Invokes the Layout Field List screen for the current line and all lines below it. You can then perform extended field editing on the fields displayed. For further information on extended field editing, see ***Extended Field Editing Window***.
`..Fc`	Fills the blank spaces of the current line with the character c.
`..I`	Inserts a single line below the current line.
`..In`	Inserts n lines below the current line.
`..J`	Joins the current line with the line below it. If you type two `..J` commands and press Enter, the range of lines delimited by the commands are joined.
`..Jn`	Joins the current line with the n-1 lines below it.
`..J*`	Joins the current line with all lines below it. If a join operation results in a line being too long, the characters which don't fit are written to the beginning of the next line.
`..M`	Moves the current line to the line below the line in which the cursor is positioned when you press Enter. If two `..M` commands are entered on the same screen, the block of lines delimited by the commands is moved below the line marked with the cursor.
`..Mn`	Moves the line and the n-1 lines below it to the line below the line in which the cursor is positioned when you press Enter.
`..M*`	Moves the current line and all lines below it to the line below the line in which the cursor is positioned when you press Enter. This command is only practical if the line marked with the cursor is above the current line.
`..R`	Repeats (copies) all the text constants in the current line and writes them to the line indicated by the cursor position. Transaction fields are not copied. If you copy a line which only contains transaction fields, the line is copied but it is blank. Two `..R` commands entered on the same screen repeat the text constants within the block of lines delimited by the commands.
`..Rn`	Repeats (copies) all text constants on the current and the n-1 following lines to the cursor position. If the cursor is located in the current line, the same text is repeated ntimes.
`..R*`	Repeats (copies) all the text constants in the current line and the lines below to the cursor position. This command is only practical if the line marked with the cursor is above the current line.
`..S`	Splits the current line at the cursor position. The content of the current line after the cursor position is written into a new line which is created below the current line. If you type in two `..S` commands and press Enter, the block of lines delimited by the commands is split at the cursor position. The part of the block after the cursor position is written into a new line which is created below the current line.

Line Command	Description
..Sn	Splits the current line and the n-1 lines below it at the cursor position.
..S*	Splits the current line and all the lines below it at the cursor position.

Field Commands

Field commands influence the field in which you enter them and are structured as follows:

```
escape-character field-command-character
```

You can apply field commands to a range of fields or constants. You can specify a range as follows:

- With two or more of the same field commands on the same screen. The column range (horizontal range) and the line range (vertical range) are determined by the positions of the commands.
- With the repetition factors "n" (where "n" is a number) or asterisk (*). With the repetition factor "n", the command is applied to the designated field and to the fields in the n-1 lines below it. The repetition factor asterisk (*), causes repetition until the bottom of the element is reached.

Field commands are entered in the first position of a field. The escape character of the field command is entered in the same position as the delimiter of the field.

When all elements are in the editor area, all elements are effected by the line and field commands you then issue.

Escape Character

The first character of each field command is the escape character. The default escape character is a period (.). The escape character defined for you is shown in the Delimiter information which you can invoke in one of the information sections of the split-screen Layout Editor.

Field Command Character

You can use some field command characters in combination with a repetition factor as described above.

(Blank)

Entering a blank at the end of each field command prevents the editor from trying to interpret any other information in the line as part of the field command.

Issuing Field commands

To issue a field command

1 Type the escape character at the first position of a field (the same position as the field delimiter).

2 Type the field command character immediately after the escape character.

3 Type a blank.

4 Press Enter.

Do not leave a blank between the escape character and the field command character.

The following is an example of a correctly-positioned field command:

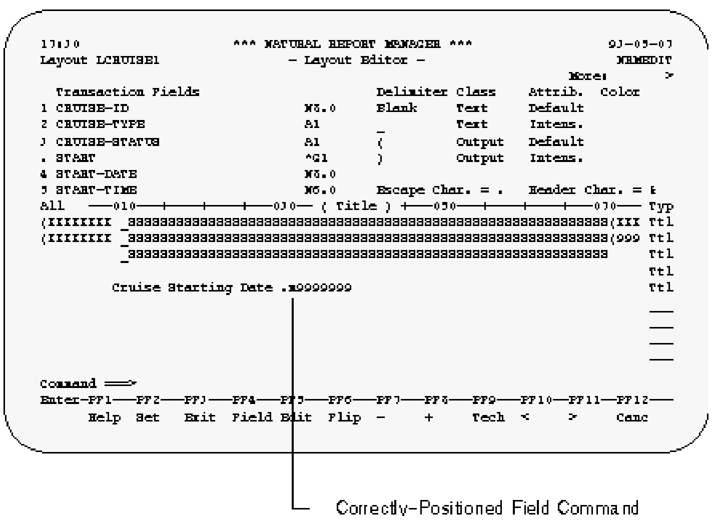

List of Field Commands

The field commands available in the Layout Editor editor area are listed in the following section.

Note: The notation *n* indicates a repetition factor. The default repetition factor is 1. You can enclose the repetition factor in parentheses if you wish.

Note: The line in which you enter the command is referred to as the current line.

Field Command	Description
`.A`	Invokes the Array Editing window in which you can determine how multiple-value and periodic group fields are displayed. This command may be applied to a single field only and not to a range of fields. The resulting array is positioned with its left upper corner at the position where the `.A` command was entered. You can redefine an

Field Command	Description
	array by applying the `.A` command to one of its elements. For further information, see *Array Editing Window*.
`.C`	Centers a field or range of fields between adjacent fields. To center a single field, enter `.C` in the field to be centered. To center a range of fields, enter `.C` in the first and last field to be centered, or enter `.C`in the first field and position the cursor to the last field to be centered. If an adjoining field or fields are not present, the column boundaries in effect for the layout definition are used instead.
`.D`	Deletes a field or range of fields. To delete a single field, enter `.D` in the field to be deleted. To delete a range of fields, enter the `.D` command in the first and last field to be deleted. The field range to be deleted may extend beyond a single line. If one array element is deleted, the entire array will be deleted.
`.E`	Invokes the Extended Field Editing window for a field. You may not apply this command to a range of fields. For further information, see *Extended Field Editing Window*.
`.J`	Joins fields located on consecutive lines.The left boundary of the join operation corresponds to where the `.J` command is entered and the right boundary corresponds to the cursor position.
`.M`	Moves a field or range of fields. To move a single field, enter the `.M` command in the field to be moved and place the cursor at the target position. To move a range of fields, enter the `.M` command in the first and last field to be moved and place the cursor at the target position.
`.R`	Repeats (copies) a text constant or range of text constants. To copy a single text constant, enter the `.R` command in the text constant to be copied and place the cursor at the target position. To copy a range of text constants, enter the `.R` command in the first and last text constant to be copied and place the cursor at the target position. Text constants and ranges of text constants are repeated downwards and from left to right.
`.S`	Splits a line or a range of lines. Enter the `.S` command in the field at which splitting is to begin and place the cursor at the target position. The line is divided at the position where the `.S` command was entered. The right portion is then moved to the cursor position.
`.T`	Truncates (deletes) a line from the field in which you enter the `.T` command to the end. If this function is used to truncate (delete) an array element, the entire array is deleted.

Overlapping

When executing a line or field command would result in fields being overwritten or the margins of the report being exceeded, an error message is displayed which indicates overlapping. The command is not executed.

Display Layout Element Screen

The Display Layout Element screen displays a layout element or elements. You can display elements which you are not allowed to edit.

```
12:03                    *** NATURAL REPORT MANAGER ***              07.Dec.1992
NRMSHOW                    - Display Layout Element -                    Monday
                                                                 More:       >
All   ---010---+----+----+---030--- ( List ) +---050---+----+----+---070--- Typ
)X)XXXXXX)XXXXXXXXXXXXXXX)00000000)00000000)0000                           Lst



Command ===>
Enter-PF1---PF2---PF3---PF4---PF5---PF6---PF7---PF8---PF9---PF10--PF11--PF12---
      Help  Set   Exit  Field Edit  Flip  -     +     Tech  <     >     Canc
```

For information on the scale, see *Layout Editor Editor Area*.

To display a layout element

- Issue the `DISPLAY element-name` command from the Display Layout Element screen, Layout Editor or Layout Field List screen.

  The element named is displayed in the Display Layout Element screen.

To display all layout elements

- Issue the `DISPLAY ALL` command from the Display Layout Element screen, Layout Editor or Layout Field List screen.

  All elements are displayed in the Display Layout Element screen.

Layout Field List Screen

The Layout Field List screen lists the fields in the layout element specified.

```
 12:00                    *** NATURAL REPORT MANAGER ***            07.Dec.1992
 NRMVARL                      - Layout Field List -                     Monday
                                                                 More: <
------------------------------------ List -------------------------------------
Cmd  Field Name (Truncated)                            Format Field Type
 __  SAG-TOURS-E-PERSON.SKIPPER-SAILING-INSTRUCTOR___ A1     Primary
 __  SAG-TOURS-E-PERSON.AREA-CODE____________________ A6     Primary Array
 __  SAG-TOURS-E-PERSON.PHONE-NUMBER_________________ A15    Primary Array
 __  SAG-TOURS-E-PERSON.PERSON-ID_____________________ N8     Primary
 __  SAG-TOURS-E-PERSON.BIRTH-DATE____________________ N8     Primary
 __  YEAR-OF-BIRTH____________________________________ N4     User
 __  ________________________________________________
 __  ________________________________________________
 __  ________________________________________________
 __  ________________________________________________
 __  ________________________________________________
 __  ________________________________________________
 __  ________________________________________________
 __  ________________________________________________
Available field commands: EDIT ARRAY DELETE

Command ===>
Enter-PF1---PF2---PF3---PF4---PF5---PF6---PF7---PF8---PF9---PF10--PF11--PF12---
      Help  Set   Exit        Edit  Flip  -     +     Tech  <     >     Canc
```

You can perform the following commands on fields displayed in the Layout Field List screen by entering the command abbreviation in the command column:

Command	Description
`DELETE`	The field is deleted from the layout.
`EDIT`	The Extended Field Editing window appears.
`ARRAY`	The Array Editing window appears.

The Extended Field Editing window and the Array Editing window are described later in this section.

Extended Field Editing Window

You can use the Extended Field Editing window to edit fields individually. For example, you may want to have the field NAME shown twice in a list, in pink at the top and in blue at the bottom.

To invoke the Extended Field Editing window

- Enter the field command .E in the first position of the field.

  Or:

  Enter ED in the command column next to the field in the Layout Field List screen.

  Note: You can also issue the EDIT command using the cursor position as described earlier in this section.

  The following example shows the version of the Extended Field Editing window which appears for numeric fields:

```
17:50                  *** NATURAL REPORT MANAGER ***              1993-05-07
Layout LCRUISE1              - Layout Editor -                         NRMVAR
                                                                  More:     ↩
>
+-------------------------Extended Field Editing (1)-------------------------+
!  Field Name                                           (Field Type: Primary ) !
!    SAG-TOURS-E-CRUISE.START-DATE____________________________________      ↩
!
!                            ________         Identical Suppress..  ON _ OFF _ !
!  Format ................. N8___             Output Length .......... 8____  ↩
!
!  Attributes ............. IL______          Numeric Sign ON ........ _      ↩
!
!  Colors ................. ________          Zero Print ON .......... _      ↩
!
+More:   +-------------------------------------------------------------------+
(XXXXXXXX _SSSSSSSSSSSSSSSSSSSSSSSSSSSSSSSSSSSSSSSSSSSSSSSSSSSSSSSSSS(XXX Ttl
(XXXXXXXX _SSSSSSSSSSSSSSSSSSSSSSSSSSSSSSSSSSSSSSSSSSSSSSSSSSSSSSSSSS(999 Ttl
         _SSSSSSSSSSSSSSSSSSSSSSSSSSSSSSSSSSSSSSSSSSSSSSSSSSSSSSSSSSSSS    Ttl
                                                                          Ttl
          Starting Date:  E9999999                                        Ttl
```

The Extended Field Editing window contains the following fields:

Field	Description
Field Name	For information only. You cannot change the field name

Field	Description
Field Type	For information only. The following information is displayed as appropriate: Primary field: contained in primary file Secondary field: contained in secondary file Lookup: n field is contained in the nth lookup file User: user fieldSystem: system variable Array: field is a multiple-value field or a periodic group
Identical Suppress	If you specify ON, identical values for the field are suppressed. If you specify OFF, identical values for the field are not suppressed. If you specify neither ON nor OFF, the setting specified in your transaction options is valid.
System Function (fields in Group only)	You can define a system function to be performed on the field. For further information on system functions, see ***Function (Func) Column*** in *Working with the Worksheet*. The `OLD` system function is only available in Natural Report Manager. This function displays the value of the field prior to a control break.
Format	For information only.
Output Length	You can change the length of the field for display purposes.
Attributes	You can change the field attributes. The following representation attributes are available:B: Blinking C: Italic/Cursive D: Normal (default) I: Intensified N: Not displayed (for passwords etc.) U: Underlined V: Reverse video The following alignment attributes are available: Z: Numeric field right-justified with leading zeros L: Left-justified R: Right-justified
Numeric Sign ON (numeric fields only)	If you mark this field, negative values are preceded by a minus (-) sign.
Colors	You can change the field's color. The following colors are available: Neutral, Blue, Green, Red, Pink, Yellow, Turquoise
Zero Print ON (numeric fields only)	If you mark this field, zeros (0) are printed for fields which have that value. Otherwise, the field is left blank.
Edit Mask	You can enter an edit mask here. For further information on edit masks, see ***Edit Masks***.
Dynamic Attribute (alphanumeric fields only)	You can determine the attributes of parts of an alphanumeric field according to its content as described below.

Dynamic Attributes

If you know that the contents of a field is always structured in a certain way, you may want to draw attention to part of the field by giving it different attributes.

To determine the attributes of parts of an alphanumeric field according to its content

1 Type the character after which you want the field attributes to change in the Dynamic Attributes field of the Extended Field Editing (2)window.

   You can enter either a special character or the hexadecimal value for any other character. The field help will help you with the required notation.

   This character will not be displayed in the report.

2 Type one of the following two-character abbreviations for color (optional if new dynamic attribute defined):

   - BL (Blue)
   - GR (Green)
   - NE (Neutral)
   - PI (Pink)
   - RE (Red)
   - TU (Turquoise)
   - YE (Yellow)

3 Type one of the following abbreviations for a dynamic attribute (optional if new color defined):

   - B Blinking
   - C Italic/Cursive
   - D Normal (default)
   - I Intensified
   - N Not displayed (for passwords etc.)
   - U Underlined
   - V Reverse video

4 Type in a final special character.

   The final special character is the character after which the dynamic field attributes revert to the original attributes.

Example:

For example, if the field `NAME` is always structured as follows:

```
Mr.surname,firstname
```

you could decide to have the surname displayed differently to the rest of the field. To have the surname displayed in red and blinking, you would enter the following in the `Dynamic Attributes` field:

```
'4BREB,
```

where '4B represents the special character period (.) in EBCDIC code. The special character period (.) is not displayed in the report.

Note: You can also enter special characters directly.

Array Editing Window

You can use the Array Editing window to determine how the occurrences of multiple-value fields and periodic groups are displayed.

Before you perform array processing, the following applies:

- For fields numbered in the Sequence column of the Worksheet, the number of occurrences defined in your user profile for multiple-value fields and periodic groups are displayed.
- For fields not numbered in the Sequence column of the Worksheet, only the first occurrence is displayed.

To invoke the Array Editing window

- Enter the field command `.A` in the first position of the field in the Layout Editor.

  Or:

  Enter `AR` in the command column next to the field in the Layout Field List screen.

```
09:52                    *** NATURAL REPORT MANAGER ***                1993-05-10
Layout LCRUISE1                - Layout Editor -                          NRMARR
                                                                   More:      ↩
>
+--------------------------------Array Editing--------------------------------+
!  Field Name                                   (Field Type: Primary Array ) ↩
!
!    SAG-TOURS-E-CRUISE.LANGUAGES                                            ↩
!
!  Upper Bounds   Output       Occurrences   Starting from   Spacing         ↩
!
!     99___       Vertical__       1__          ________     0_ Lines        ↩
!
!     191__       Horizontal       1__          ________     1_ Columns      ↩
!
!     1____       __________       1__          ________      0              ↩
!
+-------------------------------------------------------------------------------+
)XXXXXXXXXXXXXXXXXXXXXXXXXXXXXX  )S000.00 )S00000000  AXX                  Lst
```

The Array Editing window contains the following columns as well as showing field name and field type:

Column	Description
Upper Bounds	For information only. Displays the maximum number of occurrences which can be displayed.
Output	You can display the array vertically or horizontally.
Occurrences	You can change the number of occurrences to be displayed.
Starting From	You can change the number of the first occurrence to be displayed.
Line/Column Spacing	You can change the number of lines to be left between occurrences with horizontal output and the number of spaces to be left between occurrences with vertical output.

Layout Settings

To invoke the Layout Settings (General) window

- Issue the `SETTINGS` command.

  The Layout Settings (General) window appears. You can page forward to change newpage, format and delimiter settings as described below:

General

Setting	Description
Layout Name	Information only. The layout name is the same as the transaction name except for that it has the prefix for layouts.
Description	You can add or modify a description for the layout.
Profile Name	Information only. The ID of the user who created the layout.
Decimal Character	Information only.

Newpage

If you specify no condition, a new page is always started before or after an element type as defined. If you specify a condition, a new page is only started if the condition is fulfilled.

Setting	Description
Before	Mark this field next to an element type if you want it to start on a new page.
Condition	Enter the maximum number of lines of the element which can be displayed on one page before a new page is started. For example, if you enter 10, and there is only room for 8 lines of the element to be displayed on a page, the element is displayed starting on the next page.
After	Mark this field next to an element type if you want a page break to occur after it.
Condition	Enter the maximum number of lines which can be blank after the element.

Note: If you are using a transaction generated in a previous version of Super Natural (Version 2.4 or below), the line numbers for existing page breaks are shown. You can change the line numbers or just mark Before and/or After as described above. Once you have deleted all the numbers, you cannot enter line numbers again.

Format

Setting	Description
Pagesize	You can change the number of lines which are to appear on a page. The page size must be within the range 12-250 lines.
Linesize	You can change the number of characters (columns) to appear in each line. The line size must be within the range 80-249 characters.
Zero Print ON	If you mark this field, zeros (0) are printed for fields which have that value. Otherwise, the field is left blank.
Left Justified	If you mark this field, numeric values are displayed starting at the left-hand side of the field.
Mark to apply changes only to new fields	If you mark this field, your changes are only be applied to fields you use in the Layout Editor subsequently.

Delimiter

Setting	Description
Class	The following classes are offered: Text, Output Only.
Attribute	The following attributes are offered: Italic/Cursive, Normal (default), Intensified, Not displayed (for passwords etc.), Underlined, Reverse video, Dynamic (not available).
Color	The following colors are offered: NE (Neutral), BL (Blue), GR (Green), RE (Red), PI (Pink), YE (Yellow), TU (Turquoise).
Delimiter	Use special characters as delimiters to represent the combinations of class, attribute and color you have specified.
Mark to apply changes new fields	If you mark this field, your changes are only applied only to fields you use in the Layout Editor subsequently.

Testing Layouts

When you test a layout, you are shown how the report data would be presented if you ran the transaction you are working on using Report Destination SCREEN, PRINTER, or EDITOR. The test report is filled with dummy data.

To test a layout

- Issue the `TEST` command from within the Layout Editor.

  The `TEST` command is allocated to PF12.

Elements

Element Length

The Layout Editor does not allow you to create a title as long as or longer than the page. If you are also using a header and footer, the Layout Editor makes sure that there is room for the report data.

Element Sort Order

The elements in the Layout Editor editor area are sorted (or not) according to the defaults set by the administrator. You can use the `SORT` command to sort the elements into the following order:

- Title
- Preface
- Header
- List
- Groups 1 - 10
- Footer
- Appendix

When you run a transaction, the layout elements always appear in a logical order. Title and footer (if defined) appear on every page and the other elements appear in the order listed above.

Title

A default Title element is generated for all reports at your site. You can edit the default Title element like any other element.

The following shows the default Title element supplied with Super Natural:

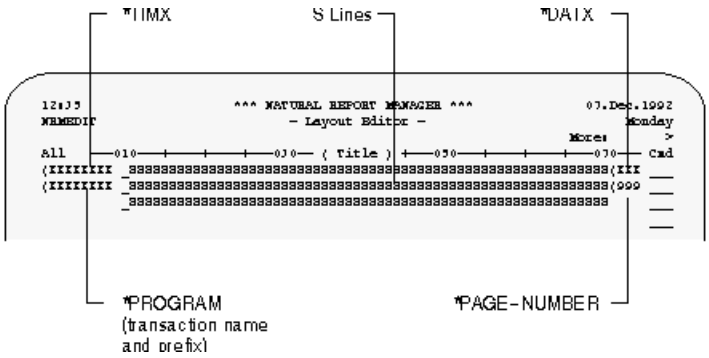

The standard default Title element supplied with Super Natural contains the system variables `TIMX`, `DATX`, `PROGRAM` and `PAGE-NUMBER` but your administrator may change this.

For further information on system variables, see ***System Variables***.

The Super Natural administrator provides a default Title element to fit the needs at your site. For example, he may want the name of the company to appear at the top of all reports.

S Lines

The S lines are a placeholder for up to 5 lines of selection criteria. Each S line contains 60 Ss. If you either add or erase Ss from the S lines, the Ss are interpreted as text. You can edit the S lines if you wish. For example, you can move the S lines two lines down and enter text above them.

Dynamic Values in Title Element

If you use dynamic input fields in the first 5 lines of your selection criteria, the current value of the field does not appear in the standard title when the transaction is run.

To display the current value of a dynamic input field in the title when the transaction is run

1. Edit the Title element.
2. Position the dynamic input field in the editor area as described in the section Positioning Transaction Fields in a Layout Element earlier in this section.

   The current value of the dynamic input field is supplied in the title when the transaction is run.

12 Working with Prototype Programs

- What Are Prototype Programs? 226
- Listing Prototype Programs 227
- Generating Prototype Programs 227
- Saving Prototype Programs 227
- Running Prototype Programs 228
- Leaving the Natural Program Editor 228
- Modifying Prototype Programs 228
- Copying Prototype Programs 229
- Deleting Prototype Programs 230
- Example Prototype Program 230

This section describes Prototype Programs and how to handle them. An example prototype program is also given.

This section covers the following topics:

- **What Are Prototype Programs?**
- **Listing Prototype Programs**
- **Generating Prototype Programs**
- **Saving Prototype Programs**
- **Running Prototype Programs**
- **Leaving the Natural Program Editor**
- **Modifying Prototype Programs**
- **Copying Prototype Programs**
- **Deleting Prototype Programs**
- **Example Prototype Program**

What Are Prototype Programs?

Prototype programs are basic program frameworks for reporting or data maintenance transactions. The program framework for a transaction is generated in Natural reporting mode. A Natural programmer can use the program framework as a prototype for further development. Because it doesn't contain any code specific to Super Natural, a prototype program can be used like any other Natural program.

Note: When you use prototype programs, Super Natural no longer checks your activities, since you are working withNatural. That means that you are fully responsible for what you do.

Note: Prototype programs created with Super Natural under Natural Version 2.2 cannot be cataloged under Natural Version 2.3 without revision. This is because the keyword LESS of the `NEWPAGE` statement is no longer optional, but required.

Listing Prototype Programs

To list the prototype programs generated in your present library

- Issue the `PROTOTYPE` command.

  The Prototype List screen appears.

  The Prototype List screen functions in the same way as all object list screens. For further information on how to use object list screens, see ***Object List Screens*** in *Starting Up*.

Generating Prototype Programs

To generate a prototype program

- Issue the `GENERATE PROTOTYPE` command from within a transaction you have finished creating or modifying.

  You can only generate prototype programs from transactions which can be run.

  Prototype programs generated with Super Natural are read into the Natural program editor where they can be modified, saved and/or executed.

  Enter Natural program editor commands at the top left corner of the screen after the greater than sign (>).

  For further information concerning the Natural program editor, refer to the *Natural Reference* documentation.

Saving Prototype Programs

To save a prototype program

- Issue the `SAVE` command while in the Natural program editor.

Note: If you do not save your prototype program before leaving the Natural program editor for the first time, you will lose the prototype and have to generate it again!

When you leave the Natural program editor, the Prototype List screen appears.

When you save a prototype program you have generated from an existing transaction, the transaction name appears on both the Transaction Listscreen and the Prototype List screen.

When you save a prototype program generated from a transaction you are creating which you have not saved or run, the transaction name (program name) appears on the Prototype List screen but not on the Transaction List screen and the transaction is lost.

When you save a prototype program generated from a transaction you are modifying which you haven't saved or run, the transaction name (program name) appears on the Prototype List screen but modifications you have made since you last saved the transaction are lost.

Running Prototype Programs

Do not run a prototype program if you have accessed from Super Natural as this is *not* a development environment. You will have problems if the program has errors in it. If you want to run a prototype program, access it directly from Natural.

Note: Prototype programs created with Super Natural under Natural Version 2.2 cannot be cataloged under Natural Version 2.3 without revision. This is because the keyword LESS of the `NEWPAGE` statement is no longer optional, but required.

Leaving the Natural Program Editor

To leave the Natural program editor and return to Super Natural

- Enter a period (`.`) in the top line of the editor and press Enter.

Note: The prototype program is not saved.

Modifying Prototype Programs

To modify a prototype program

- Enter the command abbreviation `MO` in the command column of the Prototype List screen next to the prototype program name.

  Or:

  Issue the `MODIFY PROTOTYPE` *`name`* command.

The Natural program editor appears where you can modify the program.

In prototype programs created from data maintenance transactions, the data maintenance statements `STORE`, `UPDATE`, `DELETE` etc. are commented out with asterisks (*) to prevent accidental execution of data maintenance functions. If you access these programs directly from Natural and want to run them, you must remove the asterisks and provide `END TRANSACTION` and `BACKOUT TRANSACTION` statements yourself.

Copying Prototype Programs

Program Stored in Your Private Library

If you want to copy a prototype program stored in your private library, you simply save it under a different name in the Natural program editor.

To save a program stored in your private library

1. Enter the command abbreviation `MO` in the command column of the Prototype List screen next to the prototype program name.

   The Natural program editor appears displaying the prototype program.
2. Issue the `SAVE` command together with the name to be assigned (see the note below for naming conventions).

   To identify the new program as a prototype to Super Natural, the first character of the new name must be the prefix for prototype programs at your installation. Otherwise the program will not be listed on the Prototype List screen.

   Now the same program exists twice, but with two different names.

Program Stored in a Public Library

To copy a prototype program stored in a public library to your private library

- Enter the command abbreviation `CO` in the command column next to the prototype program name of the Prototype List screen in the public library.

  Or:

  Issue the `COPY PROTOTYPE` *`name`* command.

  The prototype program is copied to your private library.

Deleting Prototype Programs

To delete a prototype program

1 Enter the command abbreviation `DE` in the command column of the Prototype List screen next to the prototype program name.

   Or:

   Issue the `DELETE PROTOTYPE` *`name`* command.

   The Confirm Delete window appears. This window asks you to confirm that you want to delete the prototype program named.

2 Enter Y to delete the prototype program.

   The prototype program is deleted.

Example Prototype Program

The following prototype program was generated with the transaction SAMPLE3 demonstrated in the *Tutorial*:

```
>                                        > +  Program     XSAMPLE3 Lib YSBE
Top    ....+....1....+....2....+....3....+....4....+....5....+....6....+....7..
  0010 * PROGRAM: SAMPLE3
  0020 * AUTHOR : Super Natural
  0030 * DATE   : 93-03-22
  0040 *
  0050 SET GLOBALS LE=OFF ZD=OFF
  0060 FORMAT PS=21 LS=80 SF=1 AD=I HW=OFF EM=OFF KD=ON MP=32767 ES=OFF
  0070 IS=OFF SG=OFF ZP=OFF MC=1 PC=1
  0080 RESET #HEAD(L)
  0090 RESET #BE(A8) #BI(A8)
  0100 PRI. READ ( 1000000 ) SAG-TOURS-E-CRUISE
  0110     PHYSICAL
  0120     WHERE CHARTER-YACHT-TYPE = 'ATLANTIC 29'
  0130   REDEFINE START-DATE(PRI.) (2X #BF(N2))
  0140   REDEFINE START-DATE(PRI.) (4X #BG(N2))
  0150   REDEFINE START-DATE(PRI.) (6X #BH(N2))
  0160   REDEFINE END-DATE(PRI.) (2X #BJ(N2))
  0170   REDEFINE END-DATE(PRI.) (4X #BK(N2))
  0180   REDEFINE END-DATE(PRI.) (6X #BL(N2))
  0190   MOVE TRUE TO #HEAD
  0200   COMPRESS #BH '.' #BG '.' #BF INTO #BE LEAVING NO
       ....+....1....+....2....+....3....+....4....+....5....+... S 89   L 1
```

13 Using the Super Natural RPC Service

- Introduction 234
- Hints and Limitations 235
- Dynamic Input Fields 236
- Generate an RPC Service 236

This section describes how to use the RPC Service.

This section covers the following topics:

- **Introduction**
- **Hints and Limitations**
- **Dynamic Input Fields within the RPC Service**
- **Generate an RPC Service (Server Side)**

Introduction

Remote procedure call (RPC) techniques establish a framework for communication between server and client systems that can be collocated on the same computer or based on a network of identical or heterogeneous machines and operating systems. The Natural RPC facility enables a client Natural program to issue a `CALLNAT` statement to invoke a subprogram in a server Natural. The Natural client and server sessions may run on the same or on a different computer.

Natural RPC exploits the advantages of client server computing. In a typical scenario, Natural on a Windows client computer accesses server data (using a middleware layer) from a Natural on a mainframe computer. The following advantages arise from that:

- The end user on the client can use a Natural application with a graphical user interface.
- A large database can be accessed on a mainframe server.
- Network traffic can be minimized when only relevant data are sent from client to server and back.

The RPC service is designed to produce Super Natural services for distributed working. Super Natural RPC generates a Natural RPC subprogram from a Super Natural Transaction. This Natural RPC subprogram represents a Naturalobject that is executable in any Natural RPC environment. A Natural RPC service (subprogram) that was generated from Super Natural is executable via a Natural RPC server. The RPC client can be in a network or on a local system and is completely independent.

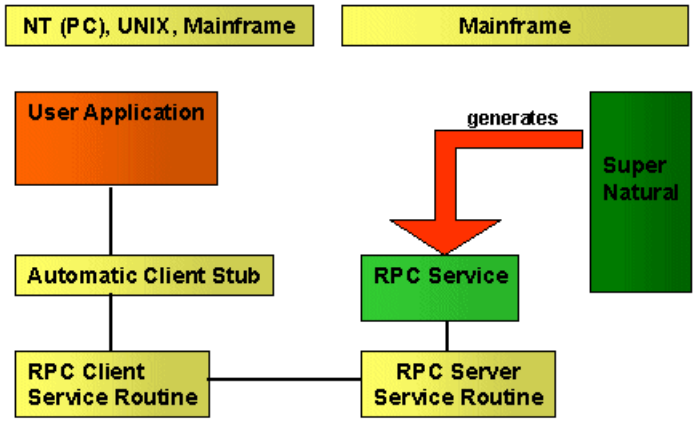

For further information about RPC, see the *Natural RPC* documentation

Hints and Limitations

The following points provide information on the RPC service and show which transactions are not supported:

- Before you can start using the RPC Service the administrator has to set it up in the user profile.
- The RPC Service is generated in Natural Reporting Mode.
- The RPC Service can be used as any Natural RPC Service. It contains no Super Natural-specific information.
- For each RPC Service generation, the transaction is automatically saved with the Super Natural command `KEEP`.
- You can only use Report Transactions to generate the RPC Service, no Data Maintenance Transactions.
- Transactions, defined with report type `Tabular` are not supported by the RPC Services.
- The RPC Service Objects are generated to be used with automatic Natural RPC execution. This requires to set the RPC parameter to `AUTORPC=ON`. For further information see the *Natural Documentation* section *RPC > Automatic Natural RPC Execution*.
- The library type is important to meet the requirements of the RPC logon feature that is set on the client side. For further information see *Natural Documentation* section *RPC > Logon Features*.

Dynamic Input Fields

You can process more dynamic Super Natural RPC by using the Super Natural dynamic input fields. Herewith the client application defines the selection values at execution time when calling the RPC Service.

This requires an additional input structure to be generated for the RPC Service. It must be part of the client interface.

Generate an RPC Service

You can use any transaction (except the documented limitations) of your worksheet to proceed the RPC Service.

To generate an RPC Service

1 Select a transaction out of the transaction list with the modify (`MO`) command.

The worksheet appears.

2 Enter `GENERATE RPC` into the command line.

3 Press Enter.

The following window with the default settings appears:

```
        RPC-Service Generation

The RPC Service will be stored with
    Object Name ........... RPCSMPL1
    in Library ............ NSNSAMPL
    with Generation Mode .. Direct
    and Record Limit ...... 545

  _  Generate with these options
  X  Change options before generation
  _  Modify Transaction
```

4 Specify how you want to proceed:

Generate with these options

The generation process starts. If the service object to be generated already exists, confirm the **replacement** in the appearing window.

Change options before generation

Modify the RPC service options before starting the generation process. The Modify Generation Options window appears.

Modify Transaction

Return to the preceding screen to modify the transaction.

5 Select `Change Options before Generation`.

6 Press Enter.

The following screen appears:

```
 RPC-Service - Modify Generation Options

RPC Service Object Name ........ RPCSMPL1
            Library ............ NSNSAMPL

Generation Mode ................ D  Direct
Limit of Result Records ........ 545____
(Max. possible Result Records .. 545     )
```

7 Fill in the required information.

RPC Service Object Name

Name of the RPC Service Object to be generated. Depends on the user options and can be pre-defined by the administrator.

Library

Library of the RPC Service Object to be stored. Depends on the user options and can be pre-defined by the administrator.

Generation Mode

Direct or Context. Defines how the Generation will be processed.

Limit of Result Records / Max. possible Result Records

Result record handling. For further information see section ***Result Data Limitations***.

8 Press Enter.

The RPC Service Object has been generated and is ready to use.

You can control your RPC Service by looking at the Natural-Code.

To confirm the replacement of an RPC Service

If you want to generate the same RPC Service object twice you have to confirm the replacement of the first.

1 Specify the RPC Service Object name in the RPC Options window and press Enter.

The following window apprears:

```
!-----------------------------------------!
!         Confirm Replace RPC Service     !
!                                         !
!  The RPC Service RPCSMPL1               !
!       in Library NSNSAMPL               !
!  does already exist.                    !
!  The object will be replaced now.       !
!                                         !
!  Enter Y to confirm: Y                  !
!-----------------------------------------!
↩
```

2 Confirm the replacement by entering Y and press Enter.

Result Data Limitations

Direct Mode

The number and the length of fields are relevant for the number of records!

Example selected result data:

#FIELD - A	N 8
#FIELD - B	A 1
#FIELD - C	A 20
#FIELD - D	A 20

- results in a record length of 49 Byte
- maximal parameter buffer is 30 KByte
- results in a maximal number of 612 records

Context Mode

The largest field length is relevant for the number of records in the context area (intermediate storage). The number of records retrieved with one client call has the same limitation as explained in direct mode but multiple calls can be performed in the context mode.

Example selected result data:

#FIELD - A	N 8
#FIELD - B	A 1
#FIELD - C	A 20
#FIELD - D	A 20

- largest field length is 20 Byte
- maximal array size for a field in the context area is 32 KByte
- results in a maximal number of 1638 records

14 Using User Exit Programs

- What are User Exit Programs? 242
- Activating User Exit Programs 243
- Deactivating User Exit Programs 245
- Locking User Exit Locations 245

This section describes user exit programs.

This section covers the following topics:

- **What are User Exit Programs?**
- **Activating User Exit Programs**
- **Deactivating User Exit Programs**
- **Locking User Exit Locations**

What are User Exit Programs?

User exit programs are programs stored outside Super Natural which can be invoked and executed when a Super Natural transaction is run. A user exit program can be a Natural object (program, sub-program, sub-routine or map) or a Natural-callable program stored outside Natural. Super Natural enables the end user to invoke user exit programs from selected locations within one or more transactions.

User exit programs are usually written by the Super Natural administrator and can be used in the following ways:

- To carry out repetitive or complex tasks
- To carry out tasks which are repeated every time a particular file is accessed
- To perform many functions additional to the normal capabilities of Super Natural.

Once a user exit program has been activated, it is carried out each time the transaction is run or a particular file is accessed.

Your administrator will tell you the following:

- The names of the user exit programs available to you
- Which parameters to use
- In which order to use the parameters.

Activating User Exit Programs

You can activate a user exit program whilst adding or modifying a transaction.

To activate a user exit program

- Issue the `USEREXIT` command.

  The Exit Specification screen appears:

```
16:13                      ***** Super Natural *****                1995-06-01
SAMPLE1                     - Exit Specification -                      SN3500

Exit  Exit      NATURAL  Parameter  Exit Location
No.   Program    Object   List
 1    ________     _               At start
 2    ________     _               Before primary  file read
 3    ________     _        _      Before secondary file read
 4    ________     _        _      Before lookup, logic & calculations
 5    ________     _        _      Before external/buffer sort
 6    ________     _        _      After  external/buffer sort
 7    ________     _        _      Before work/PC-write & add/update
 8    ________     _        _      Before report output
 9    ________     _        _      Before end of read loop(s)
10    ________     _               At end





Command ===>
Enter-PF1---PF2---PF3---PF4---PF5---PF6---PF7---PF8---PF9---PF10--PF11--PF12---
      Help  Next  Exit              Flip                    Sel   Run   Canc
```

  First you must decide at which exit location (at which point in your transaction) you want the user exit program to be activated.

To activate an external program

- Type its name in the Exit Program column next to the exit location you require.

To activate a Natural object

1. Type its name in the Exit Program column.

2 Mark the Natural Object column next to the exit location you require.

If you enter the name of a Natural object which doesn't exist, a window appears which asks if you to confirm the entry. If you enter N, the name is removed from the `Exit Program` column.

If you enter Y, you can continue and either write or obtain access to the program later.

Note: You must write or obtain access to the program before you can run the transaction.

Optional:

To pass values from your transaction to the external program

1 Mark the Parameter column at the relevant exit location.

2 Press Enter.

The Exit Parameter window appears with a selection list of the fields, which you can use as parameters in the external program.

At exit location 1, no fields are available.

At exit locations 2 and 10, only user fields and dynamic input fields are available. If the transaction contains no user fields or dynamic input fields, the Parameter list is protected next to these exit locations.

At exit locations 3 through 9, all the fields which have been read by that point in the transaction are available.

Multiple-value fields and periodic groups are not available.

3 Mark the values you want to be passed to the external program using numbers from 1 to 40 to specify the sequence.

4 Press Enter.

You can now continue creating or modifying your transaction.

You can specify more than one user exit program for a transaction.

Deactivating User Exit Programs

If a user exit program is already defined for a transaction or a file, you do not have to use it as long as it has not been locked. For example, your administrator may have activated a user exit program to be used each time a particular file is accessed.

You can deactivate user exit programs whilst creating or modifying a transaction:

To deactivate a user exit program

1 Issue the `USEREXIT` command.

   The Exit Specification screen appears.

2 Overtype existing entries with blanks or with new user exit specifications.

3 Press Enter.

   The user exit is deactivated.

Locking User Exit Locations

If you lock a user exit location, the user exit specifications defined there can never be changed. For example, you can use this function when you copy a transaction into a common library to make sure that the user exit programs are used. You can also lock an exit location if you don't want it to be used.

To lock user exit specifications

- Issue the `LOCK` command from the Exit Specification screen.

  The Lock Exit window appears showing your current exit specifications.

```
17:15                      ***** Super Natural *****                05.Jan.1993
SN3500                      - Exit Specification -                      Tuesday
                                                                              ↩

Exit  Exit      NATURAL  Parameter  Exit Locati +----------Lock Exit----------+
No.   Routine   Object   List                  !     Exit  Exit      NATURAL !
 1    ________     _         _      At start    !     No.   Routine   Object ↩
!
 2    ________     _         _      Before prim !  _   1                     ↩
!
 3    ________     _         _      Before seco !  _   2                     ↩
!
 4    ________     _         _      Before look !  _   3                     ↩
!
 5    ________     _         _      Before exte !  _   4                     ↩
!
 6    ________     _         _      After  exte !  _   5                     ↩
!
 7    ________     _         _      Before work !  _   6                     ↩
!
 8    ________     _         _      Before repo !  _   7                     ↩
!
 9    ________     _         _      Before end  !  _   8                     ↩
!
10    ________     _         _      At end      !  _   9                     ↩
!
                                                !  _  10                     ↩
!
                                                !                           ↩
!
                                               +----------------------------+
```

To lock an exit location

1 Mark the Lock column next to it.

2 Press Enter.

The Lock Exit confirmation window appears for each exit to be locked.

Once you have saved a transaction with a lock in it, even the administrator cannot override the lock!

15 Adjusting a User Profile

- What is a User Profile? 248
- Modifying Your User Profile 250
- Screen Colors 252
- Screen Defaults 252
- Time and Date Formats 253
- PF Key Settings 254
- Language Code and Checklist 255
- Transaction Options 255
- Environment Options 255
- Output Options 257
- Processing Options 258
- Transaction Modes 260

This section describes the Super Natural user profile and how to modify it.

This section covers the following topics:

- **What is a User Profile?**
- **Modifying Your User Profile**
- **Screen Colors**
- **Screen Defaults**
- **Time and Date Formats**
- **PF Key Settings**
- **Language Code and Checklist**
- **Transaction Options**
- **Environment Options**
- **Output Options**
- **Processing Options**
- **Transaction Modes**

What is a User Profile?

A user profile is defined by the Super Natural administrator for each user of Super Natural to suit his or her individual requirements. For example, the administrator decides which files and libraries you can use, and gives you authorization to use various features of Super Natural.

The Super Natural administrator defines certain default settings which you can modify yourself. You can influence the appearance of screens, PF key display, screen colors, how the date and time are displayed and many technical details concerning the environment, output and processing of transactions.

Your modifications are valid for all new transactions but not for existing ones.

The user profile default settings which you can modify are organized into seven groups as shown in the following diagram:

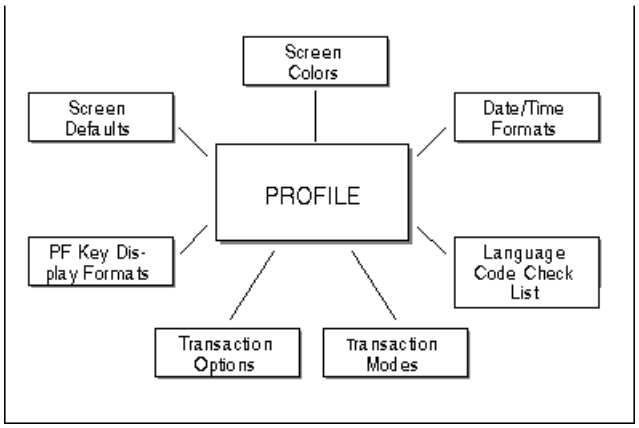

The following table gives a detailed list of the user profile defaults you can modify:

Group	Settings
Screen Colors	The colors available and the field types and screen areas which can be colored individually
Screen Defaults	Message Line Position Header Line Variables Hallo Screen ON/OFF Default Entry Menu
Date/Time Formats	Time Format and Delimiter Date format
PF Key Display Formats	SAA ISA Cursor-Sensitive PF Key Bar
Language Code/ Checklist	Language Code Automatic Checklist ON/OFF Checklist Level
Transaction Options	
Environment Options	Online screen size Printer page size Logical printer number Work file number (for output and input) PC file number (for output and input)
Output Options	Suppress empty lines Suppress identical values Suppress zero values Suppress numeric sign Heading width override Map filling character (for alphanumeric and numeric fields)

Group	Settings
Processing Options	Processing sequence Display occurrences (for multiple-value fields and periodic groups Flatten records Evaluate system functions (per outer or inner loop)
Transaction Modes	For information on transaction mode settings, see *Defining Transaction Modes for Reporting* and *Defining Transaction Modes for Data Maintenance*.

Modifying Your User Profile

To modify your user profile

- Select the `User Profile` option from the Menu.

  Or:

  Issue the `PROFILE` command where appropriate.

  The Modify Profile screen appears:

Note: The modifications you make to your transaction mode and transaction option settings are valid for all new transactions, but not for existing ones.

Modify Profile Screen

```
17:24                      ***** Super Natural *****                05.Jan.1993
SNPROF                        - Modify Profile -                        Tuesday


             _  Screen Colors

             _  Screen Defaults

             _  Date/Time Formats

             _  PF Key Settings

             _  Language Code and Checklist

             _  Transaction Options

             _  Transaction Modes



Mark items to modify or select with the cursor
Command ===>
Enter-PF1---PF2---PF3---PF4---PF5---PF6---PF7---PF8---PF9---PF10--PF11--PF12---
      Help        Exit              Flip                                Canc
```

The Modify Profile screen consists of a selection list of the seven groups of user profile settings.

To access a group of user profile settings

- Select it.

  A window or series of windows appears showing the current user profile settings.

To modify a user profile setting

1. Overtype it.
2. Press Enter.

To obtain a selection list of the options available

- Enter a question mark (?).

The next sections describe the profile settings in detail.

Screen Colors

On the left-hand side of the Screen Colors window there is a list of the field types and screen areas which can be colored individually. The current color settings are shown in highlighted text. The following colors are available:

- Blue
- Green
- Neutral
- Pink
- Red
- Turquoise
- Yellow

If you mark the Mark for `Default` field and press Enter, you return to the default settings supplied by Software GmbH.

Screen Defaults

Message Line Position

You can choose between three message line positions:

- Above the command line
- Top of the screen
- Bottom of the screen.

Header Line Variables

You can change the position of the date, time, program name, object and day within the Super Natural header.

Hello Screen

The Hello screen is the screen which welcomes you to Super Natural. You can choose to switch this screen off.

Default Entry Menu

You can choose which of the following screens you see after the Hello screen when you enter Super Natural:

- Main Menu
- Transaction List
- Prototype Program List
- Application List
- User File List

Time and Date Formats

Time Format

You can choose to display the time either in 24 hour format e.g. 17.30 or in am/pm format e.g. 5.30 pm.

Time Delimiter

The time delimiter is the character which comes between the hours and the minutes when a time is written. You can choose which character you want to use as the time delimiter.

Date Format

You can choose to display the date in any format you wish.

The following are some examples of dates in different formats and with different delimiters:

American	MM/DD/YY
European	DD/MM/YY
German	DD.MM.YY
International	YY-MM-DD
Other	YYYYMMDD

PF Key Settings

Display Format

You can choose to display the PF keys in ISA format, SAA format or as a cursor-sensitive bar.

ISA Format

The PF key allocation is shown underneath each PF key as in the following example:

```
Command ===>
Enter-PF1---PF2---PF3---PF4---PF5---PF6---PF7---PF8---PF9---PF10--PF11--PF12---
      Help        Exit              Flip                                Canc
```

If a PF key has no command allocated to it, it is displayed but not named.

SAA Format

The PF key allocation is shown next to each each PF key as in the following example:

```
Command ===>
F1=Help,F3=Exit,F6=Flip,F12=Canc,F15=Menu
```

If a PF key has no command allocated to it, it is not displayed.

Cursor-Sensitive PF Key Bar

The cursor-sensitive PF key bar is shown in reverse video at the top of the screen as in the following example:

```
      Help        Exit              Flip                                Canc
```

Language Code and Checklist

Language Code

You can change the language on the Super Natural screens.

Checklist

You can decide whether you want to use the Checklist and at which level. For further information on the Checklist, see ***The Checklist*** in *Using Super Natural*.

Transaction Options

There are three groups of transaction options; environment options, output options and processing options.

When you modify your transaction options in your user profile, the new settings are valid for all new transactions but not for existing ones. You can modify your transaction options for the transaction you are working on only (modifying or adding) by issuing the `OPTIONS` command from within the transaction - your modifications are only valid for the transaction in which you issue the command.

Environment Options

Online Screen Size

You can choose how many rows (lines) and columns (characters per line) to use when producing reports in online run mode.

The minimum number of columns is 80, the maximum 250. The number of columns must exceed the display field length by at least 1. This means that a maximum of 249 characters can be displayed. If you specify an online screen size which is larger than the physical screen size, you can use the PF keys to page to the left and right to see the whole display.

The value specified for the number of rows must not exceed your terminal's physical screen size or a Natural error message is issued.

Printer Page Size

You can choose how many rows (lines) and columns (characters per line) to use when producing reports in batch run mode or with destination PRINTER.

The minimum number of columns is 80, the maximum 250. The number of columns must exceed the display field length by at least 1.This means that a maximum page width of 249 characters can be printed.

The value specified for the number of rows must not exceed the physical page size of the printer or a Natural error message is issued.

Logical Printer Number

Enter the number of the printer to be used for transactions with report or log destination PRINTER. For further information contact your Super Natural administrator.

Work File Number

OUTPUT

Enter the work file number to which data is to be sent for transactions with report destination WORK FILE.

INPUT

Enter the work file number from which data is to be received for transactions in data selection mode DATA FROM WORK FILE.

For further information contact your Super Natural administrator.

PC File Number

OUTPUT

Enter the PC file number to which data is to be sent for transactions with report destination PC FILE

INPUT

Enter the PC file number from which data is to be received for transactions in data selection mode DATA FROM PC FILE.

For further information contact your Super Natural administrator.

Output Options

If a line, value, or sign is suppressed, it means that it is not displayed as part of the transaction output.

Suppress Empty Lines

The setting Y indicates that empty lines in a report are to be suppressed. N indicates that empty lines are not to be suppressed.

Suppress Identical Values

The setting Y indicates that identical values in a report are to be suppressed. N indicates that identical values are not to be suppressed.

Suppress Zero Values

The setting Y indicates that fields with the value zero in a report, are to be suppressed. N indicates that zero values are not to be suppressed.

Suppress Numeric Sign

The setting Y indicates that the signs of numeric fields in a report are to be suppressed. N indicates that the signs of numeric fields are not to be suppressed.

Heading Width Override

The setting Y indicates that headers in a report will be truncated (cut off) if they are too long.

If you specify the setting N, theReport Line Length window appears if the headers alone exceed the specified online screen size.

The Report Line Length window is described in the section *Reports Which are Too Wide* in the section *Reporting Transactions*.

Map Filling Character

You can choose map filling characters to differentiate between alphanumeric and numeric fields in data maintenance transactions and transactions using the data change mode MAP. The recommended characters are the underscore (_) for alphanumeric and the period (.) for numeric fields.

Processing Options

Number of Records to Read

This option controls the maximum number of records to be read when a transaction is run.

If you are modifying your profile (using the`PROFILE` command), this field is not offered and the maximum number of records read is controlled by the administrator.

If you are modifying your transaction options for the current transaction (using the `OPTIONS` command), you can reduce the maximum number of records to be read. This is intended for testing transactions. You can reset the number of records to be read before you run the transaction.

Note: You cannot read more records than the maximum determined by the administrator.

Processing Sequence

Use this option setting to determine the order in which the functions File Lookup (F), Calculations (C), Logical Conditions (L), Inter-field Arithmetic (A), External Sorting (S) and Updating Records (U) are processed when a transaction is run.

Display Occurrence

Multiple Value Field (MU)

Use this option setting to determine the number of occurrences to be displayed for a field defined as a multiple value field. For further information on multiple- value fields, see *Field Types* in *Defining Fields*.

Periodic Group (PE)

Use this option setting to determine the default number of occurrences which are to be displayed for a field contained with a periodic group. For further information on periodic groups, see ***Field Types*** in *Defining Fields*.

Field Flattening

Use this option to specify whether the occurrences of multiple value fields or fields contained in a periodic group should be presented as individual records when changing data for a report, when creating a user file or when updating data.

B indicates flattening before processing. When you run a data maintenance or data change transaction using this option, Super Natural displays a flattened version of the selected data for editing. The occurrences of periodic groups are presented one at a time as individual records which you can update or change. Once you have updated or changed a record, you are shown how it will be output (still in flattened form) before moving on to the next record.

A indicates flattening after processing (only available for data change). When you run a data maintenance or data change transaction using this option, Super Natural displays a continuous list of the selected data for editing. All occurrences are numbered. Once you have updated or changed a record, you are shown how it will be output before moving on to the next record The data is flattened and each occurrence is displayed as a separate record.

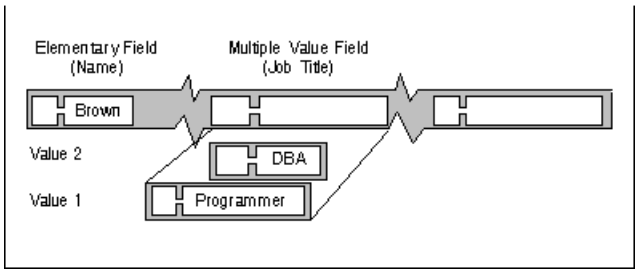

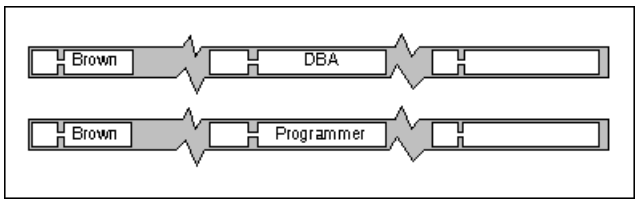

blank indicates that no flattening is to be performed: when you run a data maintenance or data change transaction using this option, Super Natural displays a continuous list of the selected data for editing as for flattening after processing. Once you have updated or changed a record, you are shown how it will be output before moving on to the next record. The data is not flattened.

Evaluate System Functions Per Outer Loop

Use this option setting to define the evaluation of system functions used for control break processing when two files have been linked for the transaction.

Y indicates that system functions are to be evaluated for all records found in the primary file (outer loop).

N indicates that system functions are to be evaluated for all records found in the secondary file (inner loop). This setting is only relevant if two files are linked via the File Selection screen. If more than two files are linked via the Lookup function (1:n), system functions are processed per outer loop.

Transaction Modes

There are transaction modes for both reporting and data maintenance transactions.

Transaction modes are described in detail in the sections*Transaction Modes for Reporting* and *Transaction Modes for Data Maintenance* later in this documentation.

When you modify your transaction modes in your user profile, the new settings are valid for all new transactions but not for existing ones. You can modify your transaction modes for the transaction you are working on (adding or modifying) from the Add Transaction window or by issuing the`MODES`command from within the transaction - your modifications are only valid for the transaction in which you issue the command.

16 Defining Transaction Modes for Reporting

- What are Reporting Modes? 262
- Modifying Your Reporting Modes 264
- Data Selection 266
- Data Change 271
- Report Type 273
- Report Level 279
- Destination 280
- Run Mode 283

This section describes the transaction modes available for reporting transactions and how to modify them for new and existing transactions. For information on transaction modes for data maintenance transactions, see *Defining Transaction Modes for Data Maintenance*. For convenience, transaction modes for reporting are referred to as reporting modes in this documentation.

This section covers the following topics:

- **What are Reporting Modes?**
- **Modifying Your Reporting Modes**
- **Data Selection**
- **Data Change**
- **Report Type**
- **Report Level**
- **Destination**
- **Run Mode**

What are Reporting Modes?

Reporting modes control the basic conditions for reporting transactions, for example where data is to be obtained and how it is to be displayed.

Reporting modes are organized into six groups as shown in the following diagram:

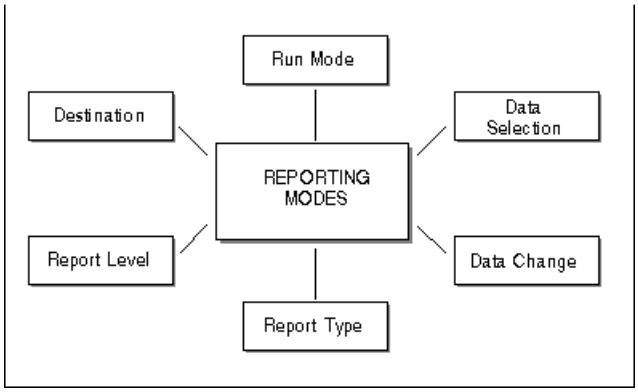

The following table gives a detailed list of the reporting mode settings available and the option code for each mode:

Group	Transaction Modes	Option Code
Data Selection	FULL-SCREEN	F
	SQL-SELECT	S
	DATA FROM WORK FILE	W
	DATA FROM PC FILE	P
Data Change	CHANGE MAP	M
	NONE	N
Report Type	LIST	L
	VERTICAL LIST	V
	TABULAR	T
Report Level	DETAILED	D
	SUMMARY	S
Destination	SCREEN	S
	PRINTER	P
	EDITOR	E
	WORK FILE	W
	PC FILE	F
	USER FILE	U
Run Mode	ONLINE	O
	BATCH	B

If you choose Run Mode BATCH, you can choose a batch printer (number 1-31) and whether Remote Job Entry (RJE) will be available for batch jobs.

The Super Natural administrator defines reporting mode settings for each user which are valid for all of that user's reporting transactions. These settings are called reporting mode defaults. Not all the reporting modes offered by Super Natural may be available at your site and you may not be authorized to use all those which are available.

You can set your own reporting mode defaults by changing your user profile. Your changes are valid for all the reporting transactions you subsequently create. You can also change your default settings for a particular transaction while creating or modifying it. Your changes do not affect any other transaction.

Modifying Your Reporting Modes

You can modify your reporting mode defaults either by modifying your User Profile or from within a transaction.

By Modifying Your User Profile

To modify your user profile

1 Select the `User Profile Maintenance` option from the Menu.

   Or:

   Issue the `PROFILE` command where appropriate.

2 Select the `Transaction Modes` option.

   The Transaction Modes Reporting window appears.

   When you modify your reporting mode defaults by modifying your user profile, your changes are valid for all the reporting transactions you subsequently create.

From within a Transaction

To modify you reporting mode defaults from within a reporting transaction you are creating or modifying

- Enter Y in the `Modify Modes` field on the Add Transaction screen.

  Or:

  Issue the `MODES` command.

  When you modify your reporting mode defaults from within a transaction, the settings you specify are only valid for the transaction you are creating or modifying and do not affect your user profile.

  The Transaction Modes Reporting window appears.

Transaction Modes Reporting Window

```
      Help        Exit              Flip                                Canc

09:22                      ***** Super Natural *****                 06.Jan.1993
SNPROF                        - Modify Profile -                       Wednesday

                                          +---Transaction Modes Reporting----+
             _  Screen Colors             !                                  !
                                          ! Data Selection .. F  Full-screen !
             _  Screen Defaults           !                                  !
                                          ! Data Change ..... N  None        !
             _  Date/Time Formats         !                                  !
                                          ! Report Type ..... L  List        !
             _  PF Key Settings           ! Report Level .... D  Detailed    !
                                          !                                  !
             _  Language Code and Checklis ! Destination ..... S  Screen      !
                                          !                                  !
             _  Transaction Options       ! Run Mode ........ O  Online      !
                                          !                                  !
             X  Transaction Modes         ! Batch printer ...    (0 - 31)    !
                                          ! RJE available ... N  (Y/N)       !
                                          !                                  !
                                          +----------------------------------+
Apply all required changes or enter "?" for help
Command ===>
```

The Transaction Modes Reporting window shows your default settings. The option code for each setting is highlighted. If an option code is not highlighted, you cannot change it.

To change a transaction mode

1 Overtype the option code with another option code or, for Batch Printer, type a number.

2 Press Enter.

To obtain a selection list of the options available for a particular reporting mode

- Enter a question mark (?) next to it.

  The following sections describe the transaction modes available for reporting:

Data Selection

FULL-SCREEN

Use this mode to select data using the Selection Editor. For further information, see ***Using Editors***.

SQL-SELECT for DB2, SQL/DS

Users of this selection mode should already be familiar with SQL

Users of DB2 and SQL/DS can use this mode to enter selection criteria using SQL (Structured Query Language) `SELECT` statements in the SQL SELECT Editor.

When you add a transaction using the transaction mode Data Selection SQL-SELECT, you cannot enter a file name in the Add Transaction window because you define which DB2 tables you are going to use in the SQL SELECT Editor.

When you press Enter, the following version of the Worksheet appears:

```
09:26                      ***** Super Natural *****                 1998-01-06
SQL                              - Worksheet -                          SN3011

Ref DB    Field Name                          Seq             Def  Info Del
AE        ____________________________________  ___   ___   __   __   __   __
AF        ____________________________________  ___   ___   __   __   __   __
AG        ____________________________________  ___   ___   __   __   __   __
AH        ____________________________________  ___   ___   __   __   __   __
AI        ____________________________________  ___   ___   __   __   __   __
AJ        ____________________________________  ___   ___   __   __   __   __
AK        ____________________________________  ___   ___   __   __   __   __
AL        ____________________________________  ___   ___   __   __   __   __
AM        ____________________________________  ___   ___   __   __   __   __
AN        ____________________________________  ___   ___   __   __   __   __
AO        ____________________________________  ___   ___   __   __   __   __
AP        ____________________________________  ___   ___   __   __   __   __
AQ        ____________________________________  ___   ___   __   __   __   __
AR        ____________________________________  ___   ___   __   __   __   __


Fill in required definitions
Command ===>
Enter-PF1---PF2---PF3---PF4---PF5---PF6---PF7---PF8---PF9---PF10--PF11--PF12---
      Help  Next  Exit  Incl        Flip  -     +           Sel   Run   Canc
```

From the Worksheet you can do the following:

- Define user fields
- Include lookup files
- Modify field output definitions
- Define the field output sequence
- Invoke the Logical Conditions Editor
- Invoke the Calculation Editor
- Invoke the SQL SELECT Editor.

When the Worksheet appears, the field list is empty. You can either define user fields in the Worksheet or go directly into the SQL SELECT Editor.

You can use the fields from a lookup file everywhere in the transaction except for in the SQL SELECT Editor.

Note: Using the SQL mode, sort and control breaks (in the S/C column) and the system functions (Average, Count, Max etc.) (in the FUNC column) are not available.

You cannot use SQL for data maintenance within Super Natural.

DATA FROM WORK FILE

Use this mode if you want to read the data for a Super Natural transaction from a sequential work file.

Note: You may not specify selection criteria.

To read data from a sequential work file

1. Add a transaction using Data Selection WORK. Do not enter a file name in the `File Name` field in the Add Transaction window.

   The Worksheet appears.

2. Issue the `SELECTION` command.

   The Work File Description Editor appears:

```
09:27                     ***** Super Natural *****                1998-01-06
WORK1                 - Work File Description Editor -               SNZUL-WF
                                                                            ↩

            Fieldname                           Format  Length  Dec.Places  ↩

       1  <                                  >                               ↩

       2  <                                  >                               ↩

       3  <                                  >                               ↩

       4  <                                  >                               ↩

       5  <                                  >                               ↩

       6  <                                  >                               ↩

       7  <                                  >                               ↩

       8  <                                  >                               ↩

       9  <                                  >                               ↩

      10  <                                  >                               ↩

      11  <                                  >                               ↩

      12  <                                  >                               ↩

      13  <                                  >                               ↩

      14  <                                  >                               ↩

      15  <                                  >                               ↩

                                                                            ↩

                                                                            ↩

Command ===>                                                                ↩

Enter-PF1---PF2---PF3---PF4---PF5---PF6---PF7---PF8---PF9---PF10--PF11--PF12---
      Help  Next  Exit        Check Flip  -     +                 Run   Canc ↩
```

3 Enter the name, format and length of the field(s) to be read from the work file.

To prevent errors when the transaction is run, the following restrictions are applied to the editor area as soon as one or more fields are used elsewhere in the transaction:

- You cannot enter new fields
- You cannot delete fields
- You cannot change the field order
- The fields used elsewhere in the transaction are locked
- Fields only used in the editor can only be edited

The availability of line commands and editor direct commands are restricted accordingly.

To lift the restrictions, remove all fields from use in the transaction, for example from the Worksheet, any other editor or in a prototype program. The Info column in the Worksheet provides you with information on field usage.

4 Press Enter.

The Worksheet appears.

If Predict is installed, you can obtain a selection list of suggested descriptions for sequential or work files.

To get a selection list of suggested descriptions for sequential or work files

- Enter an asterisk (`*`) in the `File Name` field in the Add Transaction window.

  The Sequential Files window appears. When you have selected a file description, the Worksheet appears with the fields from the description already entered.

DATA FROM PC FILE

Use this mode if you want to read the data for a Super Natural transaction from a sequential PC file.

Note: You may not specify selection criteria.

To read data from a sequential PC file

1 Add a transaction using Data Selection. Do not enter a file name in the `File Name` field in the Add Transaction window.

  The Worksheet appears.

2 Issue the `SELECTION` command.

  The PC File Description Editor appears:

```
09:28                     ***** Super Natural *****                1998-01-06
PCDATA                - PC File  Description Editor -                SNZUL-WF
                                                                             ↩

            Fieldname                           Format  Length  Dec.Places   ↩

       1  <                                 >                                 ↩

       2  <                                 >                                 ↩

       3  <                                 >                                 ↩

       4  <                                 >                                 ↩

       5  <                                 >                                 ↩

       6  <                                 >                                 ↩

       7  <                                 >                                 ↩

       8  <                                 >                                 ↩

       9  <                                 >                                 ↩

      10  <                                 >                                 ↩

      11  <                                 >                                 ↩

      12  <                                 >                                 ↩

      13  <                                 >                                 ↩

      14  <                                 >                                 ↩

      15  <                                 >                                 ↩

                                                                             ↩

                                                                             ↩

Command ===>                                                                 ↩

Enter-PF1---PF2---PF3---PF4---PF5---PF6---PF7---PF8---PF9---PF10--PF11--PF12---
      Help  Next  Exit        Check Flip  -     +                 Run   Canc ↩
```

3 Enter the name, format and length of the field(s) to be read from the PC file.

To prevent errors when the transaction is run, the following restrictions are applied to the editor area as soon as one or more fields are used elsewhere in the transaction:

- You cannot enter new fields
- You cannot delete fields
- You cannot change the field order
- The fields used elsewhere in the transaction are locked
- Fields only used in the editor can only be edited

The availability of line commands and editor direct commands are restricted accordingly. To lift the restrictions, remove all fields from use in the transaction, for example from the Worksheet, any other editor or in a prototype program. The Info column in the Worksheet provides you with information on field usage.

4 Press Enter.

The Worksheet appears.

If Predict is installed, you can obtain a selection list of suggested descriptions for sequential files.

To get a selection list of suggested descriptions for sequential files

- Enter an asterisk (`*`) in the `File Name` field in the Add Transaction window.

  The Sequential Files window appears. When you have selected a file description, the Worksheet appears with the fields from the description already entered.

Data Change

MAP - Changing Data for a Report

Use this mode to modify report data before sending it to the selected destination. When you run the transaction, each record is shown on a screen where you can enter your data changes.

Use this mode to change data for reports with the following Destinations:

- PRINTER
- EDITOR
- WORK FILE
- PC FILE
- USER FILE

Report data is changed for output purposes only. This mode does not perform data maintenance.

To change date for a report

1 Run a report with Data Change = MAP.

   A screen appears showing the first record found.

2 Make your modifications.

3 Press Enter.

   The next record found is displayed.

4 Continue as above until you have made all the changes you require.

   When you reach the end of the report data, the report is sent to the Destination specified.

   If you have modified the records desired, you can press PF2 (`EXIT`) before reaching the end of the report to send the data to the Destination specified.

Your changes are not saved. The next time you execute or run the transaction, you must make the changes again.

Flattening

In order to change data for a report, the occurrences of multiple-value fields and periodic groups must be presented in separate records. This is called flattening records.

The user option `FIELD FLATTENING` determines whether the occurrences of multiple-value fields or fields contained in a periodic group are presented as individual records when data is changed for a report.

For further information on flattening, see ***Transaction Options*** in *Adjusting a User Profile*.

NONE

Use this option if you want the original report data to be sent to the destination selected.

Report Type

LIST - Horizontal Report Output

Use this mode to produce output as a list with a title and column headings as shown in the example below:

```
09:56:12  AA                                                        1998-01-06
IDDM1                                                                  1

        CH-YACHT-TYPE          CH-BASE- SEASON-S SEASON-E    PRICE-1W       PRI
------------------------------ -------- -------- -------- -------------- ------

ATLANTIC 25                    11       19900331 19900427        980.000
ATLANTIC 26                    11       19900331 19900427       1120.000
ATLANTIC 26                    14       19900303 19900330       1080.000
ATLANTIC 29                    11       19900331 19900427       1260.000
ATLANTIC 29S                   11       19900331 19900427       1380.000
ATLANTIC 29S                   14       19900303 19900330       1360.000
ATLANTIC 29S                   15       19891014 19891215       1573.000
ATLANTIC 30                    11       19900331 19900427       1490.000
ATLANTIC 32                    11       19900331 19900427       1650.000
ATLANTIC 32S                   14       19900303 19900330       1700.000
ATLANTIC 32S                   15       19891014 19891215       1969.000
ATLANTIC 34                    11       19900331 19900427       1950.000
ATLANTIC 34                    14       19900303 19900330       1920.000
ATLANTIC 36                    11       19900331 19900427       2120.000
ATLANTIC 36                    14       19900303 19900330       2150.000

Enter-PF1---PF2---PF3---PF4---PF5---PF6---PF7---PF8---PF9---PF10--PF11--PF12---
            Print Exit              Flip        +     Posi  <     >     Canc
```

VERTICAL LIST

Use this mode to display the fields for each record in a vertical list (one or more pages per record).

The records are displayed individually when you run the transaction as shown in the example below:

```
09:57:27  AA                                                        1998-01-06
IDDM1                                                                 1

CH-YACHT-TYPE .................. ATLANTIC 25
CH-BASE-ID ..................... 11
SEASON-START ................... 19900331
SEASON-END ..................... 19900427
PRICE-1W ....................... 980.000
PRICE-2W ....................... 1862.000
PRICE-3W ....................... 2646.000
PRICES-STATUS ..................









Enter-PF1---PF2---PF3---PF4---PF5---PF6---PF7---PF8---PF9---PF10--PF11--PF12---
            Print Exit              Flip        +     Posi  <     >     Canc
```

TABULAR

Use this mode to display reports in tabular form.

When you add a transaction of report type TABULAR, a reduced version of the Worksheet appears showing the Output Definition, Information and Delete columns.

Note: You cannot access Natural Report Manager from transactions of Type TABULAR.

To display a report in tabular form

1 Enter selection criteria in the selection editor.

2 Issue the `TABULAR` command to determine the output of the report.

The Tabular Report Specification screen appears:

```
12:05                    ***** Super Natural *****                14.Dec.1992
SN3300                - Tabular Report Specification -                 Monday
                                                                          ↩

     Control Field(s)                  Chars   Increment                  ↩

1 .. ________________________________    __   ____________________        ↩

2 .. ________________________________    __   ____________________        ↩

3 .. ________________________________    __   ____________________        ↩

                                                                          ↩

Analyze Field                       Across Field                          ↩

________________________________    ________________________________      ↩

Analyze Field Functions             Across Field Ranges                   ↩

  COUNT ........ _                 ____________________ to ____________________
  AVERAGE ...... _                 ____________________ to ____________________
  MIN .......... _                 ____________________ to ____________________
  MAX .......... _                 ____________________ to ____________________
  SUM .......... _                 ____________________ to ____________________
  TOTAL ........ _                 ____________________ to ____________________
                                   ____________________ to ____________________
Include Zeros .. _ (Y/N)           ____________________ to ____________________
                                   ____________________ to ____________________
                                                                          ↩

Command ===> ____________________________________________________________   ↩

Enter-PF1---PF2---PF3---PF4---PF5---PF6---PF7---PF8---PF9---PF10--PF11--PF12---
      Help  Next  Exit              Flip                    Sel   Run   Canc ↩
```

To specify Control Fields

- Enter the names of up to three fields which are to be used as control break fields in the numbered `Control Fields` fields.

To specify Chars

If you are using an alphanumeric control field you can cause a control break if the first n characters of the control break field value change.

- Enter the value n next to the relevant control field in the Chars column.

For example, if you enter 3 under `Chars` a control break only occurs if the value in the first 3 characters of the control field has changed.

To specify Increment

If you are using a numeric control field, you can define a control break if the control break field value changes by a certain increment:

- Enter the size of the increment next to the relevant control field in the Increment column.

  For example, if you enter 10 under Increment for the field `AGE`, the data is displayed in increments of 10 beginning with the lowest value present.

Note: You cannot specify both characters and increment.

Analyze Field

The `Analyze` field is the field for which you define system functions to be performed at control breaks. The `Analyze` field must be an elementary numeric field.

When you run the transaction, the values of the `Analyze` field found for the records selected are not displayed. The results of the system functions performed on the `Analyze` field at control breaks are displayed.

To specify the Analyze Field

- Enter the name of the elementary numeric field for which the tabular output is to be produced.

Analyze Field System Functions

The `Analyze Field` functions are system functions which must be defined for the `Analyze` field and are performed at control breaks.

Function	Description
`COUNT`	The number of values processed for the field being analyzed. The count is reset to zero each time the value of a control break field changes.
`AVERAGE`	The average of the values processed for the field being analyzed. The average is calculated each time the value of a control break field changes.
`MIN`	The minimum value processed for the field being analyzed. The minimum is calculated each time the value of a control break field changes.
`MAX`	The maximum value processed for the field being analyzed. The maximum is calculated each time the value of a control break field changes.
`SUM`	The sum of all values processed for the field being analyzed. The sum is reset to zero each time the value of a control break field changes.

Include Zeros

By default, zero values are not included in the calculation of the system functions mentioned above.

To specify Include Zeros

- Enter a Y in the `Include Zeros` field to include zero values.

Across Field

The results of the standard functions performed on the `Analyze` field can be displayed for ranges defined for an `Across` field. The `Across` field is displayed along the top of the report.

To specify an Across Field

- Enter the name of the field to be the `Across` field in your table.

  If you leave the `Across Field` field blank, the field you defined as the `Analyze` field is taken.

Across Field Ranges

You can specify up to nine different ranges. An asterisk (*) in the first position indicates *lowest value* and an asterisk (*) in the to column indicates the *highest value*.

The lowest and highest numeric values possible are dependent on the format of the `Across` field as shown in the samples below:

Sample Format of Across Field	Lowest Value	Highest Value
N5	-99999	+99999
P3	-999	+999
N3.2	-999.99	+999.99

To specify an Across Field Range

1. Enter the ranges of values for the `Across` field for which you want to see statistics provided by the system functions.
2. When you have completed your entries on the Tabular Report Specification screen, run the transaction.

Sample Report

The following is a page from a report (from the demo DDM *SAG-TOURS-E-YACHT*) produced using transaction mode Report Type TABULAR and specifying the following on the Tabular Report Specification screen:

Field	Entry
Control Field	YACHT-TYPE
Analyze Field	WIDTH
Analyze Field (System) Functions	COUNT, MIN, MAX
Across Field	LENGTH
Across Field Ranges	8 to 12 13 to 16 17 to 20

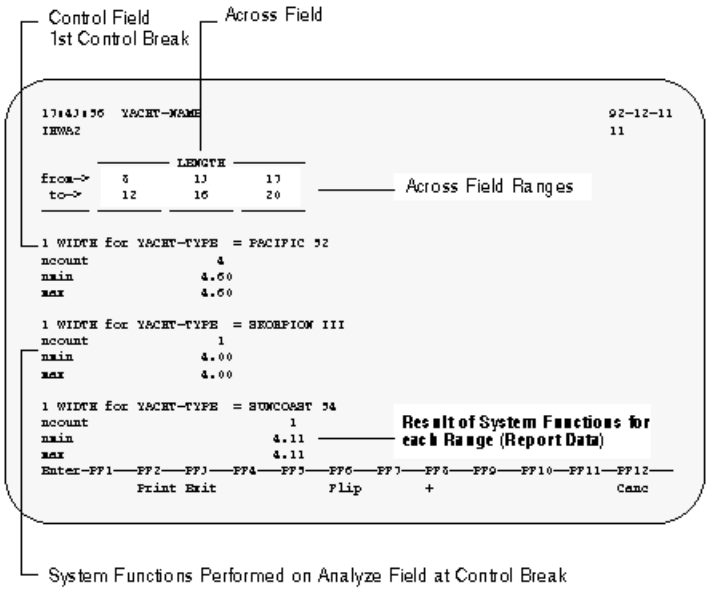

Report Level

DETAIL

Use this mode to display all records found in a report (detailed report data).

SUMMARY - Output at Control Breaks Only

Use this mode to display report data only when a control break has occurred.

If you specify the Report Level SUMMARY, you cannot define a control break without defining a system function.

For further information on control break processing, see ***Function (Func) Column*** in *Working with the Worksheet*.

Old Lines

When you run a transaction which has fields marked in the Sequence column and report level SUMMARY, the values in the last record found before each control break are displayed in lines marked Old. You can avoid this by issuing the `NOSEQUENCE` command from the Worksheet. When no fields are marked in the Sequence column, the Old lines do not appear.

SUMMARY with Destination PC FILE and WORK FILE

Use this mode to write the results of system functions at one control break or grand totals only to file. You may not mix Summary with Detail format.

You may only define one field as a control break field. If no field is defined as a break field, only grand totals are downloaded.

The system functions are written to a PC or work file in the following order, regardless of the sequence in which they were specified:

Total, Sum, Average, Maximum, Minimum, Count, Ncount, Naver, Nmin

If you specify no system functions for a selected field, the old value (the last value before the control break) is written to file. Otherwise, when a field is selected and system functions are specified, only the system functions are written to file.

If you specify more than one control break, the summary data for the lowest level break field (control break with the highest number) only is written to file.

SUMMARY with Destination USER FILE

For handling the Destination USER FILE, see section *Using the Worksheet with Report Destination USER FILE*.

Destination

In the following sections, the expression report is used for a report with title lines, column headings and data. Transaction data denotes the data only, without title lines, headings and columns.

SCREEN

Use this mode to display the report on your terminal screen.

PRINTER

Use this mode to route reports to a printer. You can also use this mode to send reports to a PC to be printed as normal PC files.

To send a report to a printer attached to your PC

1. Enter the number assigned to your PC as Logical Printer Number in your transaction options (your Super Natural administrator can tell you which number you should enter).

   For additional information on changing your transaction options, see ***Adjusting a User Profile***.

2. Enter the PC file name at the prompt which appears when you run the transaction.

   The report is sent to your PC as a PC file. You can now print the report following the procedure that you always use to print files from your PC.

Only use this method of sending a report to your PC if you want to store a report for printing. If you want to download data to your PC in order to process it and then uploading it back to Super Natural, use report destination PC FILE as described later in this section.

EDITOR

Use this mode to place the report in the Natural editor where it can be accessed and processed using Natural.

WORK FILE/PC FILE

Use these modes to write reports to sequential work files or PC files. You can transfer or download the reports with or without headers.

Note: The appropriate numbers must be set for the transaction options Work File Number or PC File Number Ask your Super Natural administrator which number(s) you should use.

For further information on transaction options, see*User Profile*.

To write data to a Natural work file or a PC file

1 Create and run a Super Natural transaction with Destination WORK FILE or PC FILE.

The Work/PC File Information window appears:

```
10:06                      ***** Super Natural *****                1998-01-06
DESTWK                           - Worksheet -                          SN3011
                                                                            ↩

Ref DB    Field Name                        +----Work-/PC File Information----+
AA  1K    CRUISE-ID ......................   !                                ↩
!
AB  1     CRUISE-TYPE ....................   ! Destination ......... W        ↩
!
AC  1     CRUISE-STATUS ..................   ! Output Record Size .. 10       ↩
!
AD  1G    START ..........................   !                                ↩
!
BE        ________________________________   !   _  Continue                  ↩
!
BF       ________________________________   !   _  Write Headers and Continue !
BG        ________________________________   !   _  Modify Transaction        ↩
!
BH        ________________________________   !                                ↩
!
BI       ________________________________  +---------------------------------+
```

2 Mark the `Continue` field to download the report without headers.

3 Mark the `Write Headers` and `Continue` field to download the report with headers.

4 Mark the `Modify Transaction` field to modify the transaction.

5 Press Enter.

If you are using report destination PC FILE, you are prompted to enter the PC file name.

6 Enter the PC file name at the prompt.

The report data is written to the PC file or Natural work file. In the example shown, the following data is written:
SMITHbbbbbbbbbbbbbbbb25BOSTON (b = blank)

A message is displayed giving the number of records sent to the work file/PC file.

A message tells you how many records have been transferred or downloaded and to which file.

You have now downloaded data to a PC file or a Natural work file, where it can be processed with the software provided. In addition, there are various options that exist to automatically convert the data to popular PC formats. For additional information, see the Super Natural administrator.

For information on the report destination PC FILE in conjunction with the report level SUMMARY, see ***Summary with Destination PC File*** in *Report Level*.

Note: Work files and PCs may only be used if the required Natural facilities are available at your installation. Consult the Super Natural administrator before you use this Super Natural facility.

Header Information

The first header record consists of one `N6` field. This field contains the number of fields per record (three digits) and the length of the data records (three digits). The following diagram shows a header record for a report which contains 5 fields which have a total length of 47 characters:

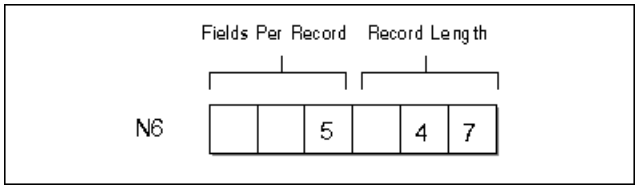

A separate header record is then created for each field. These header records each contain an `A37` field. The `A37` field is composed of the field name (32 characters), the field format (1 character), the field length (3 digits) and the number of decimal positions (1 digit). If the field name has less than 32 characters, the rest of this part of the field is filled with blanks. The following diagram shows the header record for an A30 field called `NAME`:

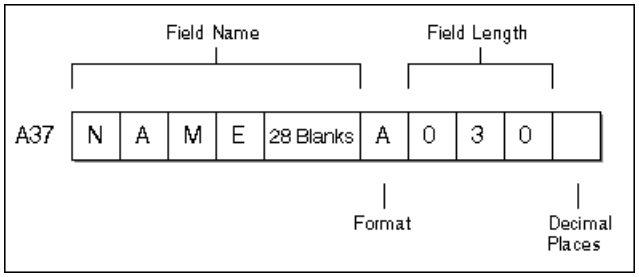

These header records are then followed by the records you selected.

If the data is written to a work file, the length of the header records is not necessarily identical with the data record length.

Writing the header information to the work file or PC when sending data has the advantage that the description of the data is located with the data itself.

USER FILE

Use this mode to write the transaction data to a new user file, which will be generated automatically during transaction execution, use report destination USER FILE. This report destination is discussed in detail in the section User Files later in this documentation.

Run Mode

ONLINE

If you want the transaction to be executed immediately, use the run mode option ONLINE.

BATCH

If you want the transaction to be run in batch mode, where a number of transactions are grouped together and processed together as a batch job, use run mode option BATCH on the Modes for Reporting screen.

Batch printer no. indicates the number of the batch printer, and batch RJE available indicates whether remote job entry is available for batch jobs. If this option is set to N, transactions for batch execution can be created but not submitted.

Your administrator will give you further information.

17 Defining Transaction Modes for Data Maintenance

- What are Maintenance Modes? 286
- Modifying Your Maintenance Mode Defaults 287
- Transaction Type 289
- Logging 289
- Logging Destination 290

This section describes the transaction modes available for data maintenance transactions and how to modify them for new and existing transactions. For convenience, transaction modes for data maintenance are referred to as maintenance modes in this section. For information on transaction modes for reporting, see *Defining Transaction Modes for Reporting*.

This section covers the following topics:

- **What are Maintenance Modes?**
- **Modifying Your Maintenance Mode Defaults**
- **Transaction Type**
- **Logging**
- **Logging Destination**

What are Maintenance Modes?

Maintenance modes control the basic conditions for data maintenance transactions: transaction type, logging and logging destination.

The Super Natural administrator defines maintenance mode settings for each user which are valid for all of his maintenance transactions. These settings are called maintenance mode defaults. Not all the maintenance modes offered by Super Natural may be available at your site and you may not be authorized to use all those which are available.

You can change your maintenance mode default settings for a particular transaction. Your changes do not affect any other transaction.

Maintenance modes are organized into three groups as shown in the following diagram:

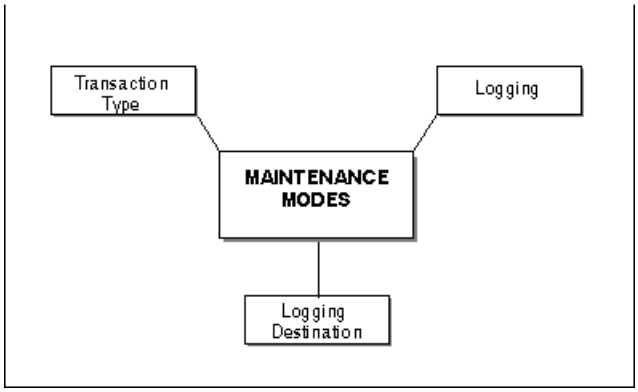

The following table gives a detailed list of the maintenance mode settings available and the option code for each mode:

Group	Transaction Modes	Option Code
Transaction Type	Update single	U
	Add	A
	Delete	D
	Update Multiple	E
Logging	On	Y
	Off	N
Logging Destination	Printer	P
	Editor	E

Modifying Your Maintenance Mode Defaults

To modify your maintenance mode defaults

1 Mark the `Modify Modes` field in the Add Transaction screen.

2 Enter Y in the `Data Maintenance` field in the Add Transaction screen.

3 Press Enter.

Or:

Issue the `MODES` command from within a data maintenance transaction you are creating or modifying.

When you modify your maintenance mode defaults from within a transaction, the settings you specify are only valid for the transaction you are creating or modifying.

The Transaction Modes Maintenance window appears:

```
15:52                      ***** Super Natural *****                 06.Jan.1993
SN1110                       - Transaction List -                     Wednesday
                                                                              ↩

Cmd  Name     Descript +--------------- +-Transaction Modes Data Maintenance--+
     DATMAN_           !                !                                     ↩
!
 __           ________ ! Transaction ID ! Transaction type ..... A  Add data ↩
!
 __           ________ ! Description .. !                                    ↩
!
 __           ________ !                ! Logging ............... Y  On      ↩
!
 __           ________ !                !                                     ↩
!
 __           ________ ! File name .... ! Logging destination .. P  Printer  ↩
!
 __           ________ !                !                                     ↩
!
 __          ________ ! Modify modes . +-------------------------------------+
 __           ________ ! Data maintenance .. y (Y/N)                         ↩
!
 __           ________ !                                                     ↩
!
 __          ________ +-----------------------------------------------------+
```

The Transaction Modes Maintenance window shows your default settings. The option code for each setting is highlighted. If an option code is not highlighted, you cannot change it.

To change a maintenance mode

1. Overtype the option code with another option code.
2. Press Enter.

To obtain a selection list of the options available for a particular maintenance mode

- Enter a question mark (?) next to it.

The following sections describe the transaction modes available for data maintenance:

Transaction Type

Add

Use this mode to add records to Super Natural files.

Update Single

Use this mode to update data. Records are displayed one at a time for update. Each record may include one or more pages.

Delete

Use this mode to delete records from Super Natural files, one record at a time.

Update Multiple

Use this mode to update data. Multiple records are displayed horizontally for update.

Note: This transaction type is only available for Adabas files.

The transaction types for data maintenance are described in detail in the section *Data Maintenance Transactions*.

Logging

You can write a report for data maintenance transactions containing the data that has been processed. This report is called a log. It is designed for control purposes only and may not be used to restore data.

No

Use this mode if you don't want logging to take place for data maintenance transactions.

Yes

Use this mode if you want logging to take place for data maintenance transactions.

Logging Destination

The setting for logging destination determines where the log is to be sent.

Printer

Use this mode to send the log output to a hardcopy device or a PC terminal. For printer assignment refer to the section *Transaction Options (Environment Options)* in the section *User Profile*.

Editor

Use this mode to send the log output to the Natural editor where it can be accessed and manipulated.

18 Working with Application Programs

- What are Application Programs? 292
- Listing Application Programs 292
- Adding Application Programs 293
- Executing Application Programs 297
- Deleting Application Programs 297

This section describes application programs and how to list, add, execute and delete them.

This section covers the following topics:

- **What are Application Programs?**
- **Listing Application Programs**
- **Adding Application Programs**
- **Executing Application Programs**
- **Deleting Application Programs**

What are Application Programs?

Application programs allow you to invoke any Natural application available at your site from within Super Natural. For example, if Natural Elite is installed, you can invoke it from Super Natural, do a tutorial and return to Super Natural when you have finished. Further examples of applications which may be available to you are electronic mailing systems or in-house accounting systems. Your Super Natural administrator will tell you which applications are available at your site.

Listing Application Programs

To obtain a list of application programs available

- Issue the `APPLICATION` command.

  Or:

  Select the `Application Programs` option on the Menu.

  The Application List screen appears.

  The Application List screen functions in the same way as all object list screens. For general information on object list screens, see ***Object List Screens*** in *Starting Up*.

Adding Application Programs

You can only add application programs in your private library.

To add an application program

1 Enter a new application program name in the Name column of the Application List screen in the input field next to the `Add` field.

Or:

Issue the `ADD APPLICATION` *`name`* command.

The Add Application window appears:

```
16:46                      ***** Super Natural *****                06.Jan.1993
SN1130                        - Application List -                    Wednesday
                                                                              ↩

Cmd  Name     Descriptio +------------------Add Application-------------------+
     *______              !                                                    ↩
!
 __  APPL1    __________ ! Application ID .... APPL3__                        ↩
!
 __  APPL2    __________ ! Description ....... ______________________________ !
 __           __________ !                    ______________________________ !
 __           __________ ! Application name .. ________                      ↩
!
 __           __________ ! Start-up program .. MENU____                      ↩
!
 __           __________ !                                                   ↩
!
 __           __________ ! More parameters ... N (Y/N)                       ↩
!
 __           __________ ! More commands ..... N (Y/N)                       ↩
!
 __           __________ !                                                   ↩
!
 __          __________ +--------------------------------------------------+
 __           ___________________________________________________________    ↩

 __           ___________________________________________________________    ↩

Add  appl3__                                                                 ↩

                                                     Library: SBE____ / U    ↩

Cmd(s): Execute, Copy, Delete                                                ↩

Complete the information and press ENTER                                     ↩

Command ===>                                                                 ↩

Enter-PF1---PF2---PF3---PF4---PF5---PF6---PF7---PF8---PF9---PF10--PF11--PF12---
      Help        Exit              Flip        +                       Canc ↩
```

2 Modify the application ID in the `Application ID` field if required.

The name can be any name and need not be the actual name of the application you want to invoke.

3 Enter a description of the application in the `Description` field (optional).

4 Enter the actual name of the application (the name of the Natural library where the application resides) in the `Application Name` field.

Your Super Natural administrator will tell you which applications are available at your site.

5 Enter the name of the program which starts the application in the `Start-up Program` field .

6 Mark the `More Parameters` field with Y if you want to specify parameters to be passed to the application when it is invoked.

7 Mark the `More Commands` field with Y if you want to specify more commands to be passed to the application when it is invoked.

8 Press Enter.

The Application Parameter window appears if you marked the `More Parameters` field with Y:

```
16:41                      ***** Super Natural *****                06.Jan.1993
SN1130                        - Application List -                    Wednesday
                                                                              ↩

Cmd  Name    Descriptio +--------------- +-------Application Parameter-------+
     APPL3__             !                !                                   ↩
!
 __          __________ ! Application ID ! 1  ________________________________ !
 __          __________ ! Description .. ! 2  ________________________________ !
 __           __________ !               ! 3  ________________________________ !
 __          __________ ! Application na ! 4  ________________________________ !
 __          __________ ! Start-up progr ! 5  ________________________________ !
 __           __________ !               ! 6  ________________________________ !
 __           __________ ! More parameter !                                   ↩
!
 __          __________ ! More commands  +-----------------------------------+
 __           __________ !                                                   ↩
!
 __          __________ +--------------------------------------------------+
```

9 Type in the parameters to be passed to the application when it is invoked.

10 Press Enter.

The Application Command window appears if you marked the `More Commands` field with Y:

```
16:41                     ***** Super Natural *****               06.Jan.1993
SN1130                       - Application List -                   Wednesday
                                                                          ↩

Cmd  Name    Descriptio +--------------- +- +------Application Command-------+
     APPL3__             !                !  !                               ↩
!
 __          __________ ! Application ID !  ! Additional command .. ________ !
 __           __________ ! Description .. !  !                               ↩
!
 __           __________ !                !  ! More parameters ..... N       ↩
!
 __           __________ ! Application na !  ! More commands ....... N       ↩
!
 __           __________ ! Start-up progr !  !                               ↩
!
 __          __________ !                !  +--------------------------------+
 __           __________ ! More parameter !                                  ↩
!
 __          __________ ! More commands  +-----------------------------------+
 __           __________ !                                                  ↩
!
 __         __________ +-------------------------------------------------+
```

11 Type in the name of the command you want to be passed to the application when it is invoked in the `Additional Command` field.

12 Mark the `More Parameters` field with Y if you want to specify parameters for the command.

13 Mark the `More Commands` field with Y if you want to specify another command to be passed to the application when it is invoked.

14 Press Enter.

The Application Parameter window appears if you marked the `More Parameters field` with Y.

15 Type in the parameters to be passed to the application when it is invoked.

The Application Command window appears if you marked the `More Commands field` with Y.

16 Continue as above until you have defined all the commands you require.

17 Press Enter.

The application is added.

Executing Application Programs

To execute an application program

- Enter the command abbreviation `EX` in the Command column of the Application List screen next to the application program name.

  Or:

  Issue the `EXECUTE APPLICATION` *`name`* command.

  You leave Super Natural and enter the application you have selected.

Deleting Application Programs

To delete an application program

- Enter the command abbreviation `DE` in the command column of the Application List screen next to the application program name.

  Or:

  Issue the `DELETE APPLICATION` *`name`* command.

  The Confirm Delete window appears.

  This window asks you to confirm that you want to delete the application program named. If you do not enter Y to confirm, the application program is not deleted.

  You can also delete several applications at the same time. In this case, the Confirm Multiple Delete window appears. You can choose if you want to confirm each deletion, delete without confirmation or cancel the deletion.

19 Working with User Files

- What are User Files? 300
- Listing User Files 300
- Adding User Files 302
- Information Function 306
- Deleting User Files 307
- Retrieving User Files 309
- Creating User Files Using Destination USER FILE 309

User files are only available to users of Super Natural under Adabas.

This section covers the following topics:

- **What are User Files?**
- **Listing User Files**
- **Adding User Files**
- **The Information Function**
- **Deleting User Files**
- **Retrieving User Files**
- **Creating User Files Using Destination USER FILE**

What are User Files?

User files are files created by users. You can store both data copied from a database file and your own data in user files.

Other users can modify data contained in your user files and create reports using them *only* if the Super Natural administrator has given them authorization. Other users cannot delete your user files.

There are two ways of creating user files which are described in the sections *Adding User Files* and *Creating User Files Using Report Destination USER FILE*.

Note: You can access user files created with Super Natural directly from a Natural session.

Listing User Files

To obtain a list of user files available

- Issue the `USERFILE` command.

  Or:

  Select the object *User Files* on the Menu.

  The User File List screen appears.

```
18:25                      ***** Super Natural *****                07.Jan.1993
SN2400                        - User File List -                       Thursday
                                                                   More: <    ↩

Cmd  Name                   Description                                      ↩

     *_________________                                                      ↩

 __  EMPLOYEE-DATA         ________________________________________________
 __  NEW                   ________________________________________________
 __  PERSONNEL             file del_______________________________________
 __  SUMMARY               CREATED BY: UF1 (91-09-11 15:13)_______________
 __  USER-FILE-RECORDS     ________________________________________________
 __  USERFILEV             CREATED BY: USERFIL (91-08-12 15:19)___________
 __  USERFILE1             first user file created in 3.1_________________
 __                        ________________________________________________
 __                        ________________________________________________
 __                        ________________________________________________
 __                        ________________________________________________
 __                        ________________________________________________
Add  ____________________                                                    ↩

                                                                             ↩

Cmd's: Info, Delete, Retrieve                                                ↩

Userfile successfully deleted                                                ↩

Command ===>                                                                 ↩

Enter-PF1---PF2---PF3---PF4---PF5---PF6---PF7---PF8---PF9---PF10--PF11--PF12---
      Help        Exit              Flip        +           <     >     Canc ↩
```

The User File List screen functions in the same way as all object list screens. For general information on object list screens, see ***Object List Screens*** in *Starting Up*.

The User File List screen displays a list of your user files.

Notes:

1. If a file is not in use, the description line contains a status message as described in the section ***Information Function***.
2. There is no `Library` field on the User File List screen.

Adding User Files

When you create a user file using the `Add Userfile` function you have two choices:

- Design your own file layout by defining your own field descriptions
- Copy the layout of an existing file. You cannot copy data from the template file.

When you create a user file using the `Add Userfile` function, the file you create is empty. You can add data to a user file using a data maintenance transaction. For further information, see ***Working with Data Maintenance Transactions***.

To add a user file

1 Enter a new user file name in the Name column of the User File List screen in the input field next to the `Add` field.

Or:

Issue the `ADD USERFILE` command.

The Add User File window appears:

```
14:21                      ***** Super Natural *****                08.Jan.1993
SN2400                        - User File List -                         Friday
                                                                            ↩

Cmd  Name          +----------------------Add User File-----------------------+
     *____________  !                                                         ↩
!
 __  EMPLOYEE-DATA ! User file name ........ NEW_________________            ↩
!
 __  PERSONNEL     ! Description ........... ________________________________  ↩
!
 __  SUMMARY       !                        ________________________________  ↩
!
 __  USER-FILE-REC !                                                         ↩
!
 __  USERFILEV     ! Use fields from file .. ________________________________ !
 __  USERFILE1     !                                                         ↩
!
 __                +-------------------------------------------------------+
```

2 Enter a name for the user file you are creating in the `User file name` field.

File names must begin with a letter or a special non-blank character and are limited to 20 characters.

3 Enter a description of the user file in the `Description` field if required.

4 If you want to copy the layout of an existing file, type it's name in the `Use Fields From File` field.

5 If you don't know the name of the file you want to use, enter an asterisk (*) and the File Selection List window appears.

6 If you don't want to copy the layout of an existing file, leave this field blank.

7 Press Enter.

The User File Description Editor appears. If you are not copying the layout of an existing file, the editor columns are blank:

```
17:15                      ***** Super Natural *****              08.Jan.1993
SNZUL-UF                - User File Description Editor -                Friday
                                                                              ↩

          Fieldname                          Format  Length  Dec.Places  Key
      1 <                                 >                                   ↩

      2 <                                 >                                   ↩

      3 <                                 >                                   ↩

      4 <                                 >                                   ↩

      5 <                                 >                                   ↩

      6 <                                 >                                   ↩

      7 <                                 >                                   ↩

      8 <                                 >                                   ↩

      9 <                                 >                                   ↩

     10 <                                 >                                   ↩

     11 <                                 >                                   ↩

     12 <                                 >                                   ↩

     13 <                                 >                                   ↩

     14 <                                 >                                   ↩

     15 <                                 >                                   ↩

                                                                              ↩

                                                                              ↩

Command ===>                                                                  ↩

Enter-PF1---PF2---PF3---PF4---PF5---PF6---PF7---PF8---PF9---PF10--PF11--PF12---
      Help        Exit              Flip  -     +                       Canc ↩
```

If you are copying the layout of an existing file, the field descriptions for that file are already entered in the columns of the user file layout editor. You can keep the descriptions, change them, delete them and/or add new field descriptions.

The following diagram shows the User File Description Editor with the layout of the demonstration file *SAG-TOURS-E-PERSON*:

```
14:26                      ***** Super Natural *****              08.Jan.1993
SNZUL-UF                - User File Description Editor -                Friday
                                                                 More:     +
          Fieldname                          Format  Length  Dec.Places  Key
      1 < PERSON-ID                        >    N         8                D ↩

      2 < BIRTH-DATE                       >    N         8                  ↩

      3 < SEX                              >    A         1                D ↩

      4 < SURNAME                          >    A        20                D ↩

      5 < FIRST-NAME-1                     >    A        20                  ↩

      6 < FIRST-NAME-2                     >    A        20                  ↩

      7 < TITLE                            >    A        20                  ↩

      8 < FORM-OF-ADDRESS                  >    A         8                  ↩

      9 < ADDRESS-ADDITION                 >    A        20                  ↩

     10 < STREET-NUMBER                    >    A        20                  ↩

     11 < COUNTRY                          >    A         3                D ↩

     12 < ZIP-CODE                         >    A        10                D ↩

     13 < CITY                             >    A        20                D ↩

     14 < AREA-CODE                        >    A         6                  ↩

     15 < PHONE-NUMBER                     >    A        15                  ↩

                                                                            ↩

                                                                            ↩

Command ===>                                                                ↩

Enter-PF1---PF2---PF3---PF4---PF5---PF6---PF7---PF8---PF9---PF10--PF11--PF12---
      Help        Exit              Flip  -     +                       Canc ↩
```

If you are copying the layout of an existing file, some of the fields of that file may not be presented in the User File Description Editor. The omitted fields are Adabas phonetic

descriptors and group fields. Multiple-value fields and fields contained in a periodic group are changed to elementary fields. Field format and length are not changed.

You use the User File Description Editor to edit the layout of the user file you are creating by adding, modifying and/or deleting field descriptions. For information on how to use Super Natural editors, see ***Editor Commands*** and ***Editor Help System*** in *Using Editors*.

8 Type/modify the names of the fields you want in your user file in the Fieldname column.

Do not use Natural key words as field names.

9 Type/modify the format of the fields you want in your user file in the Format column.

You can define fields with format A or N only.

10 Type/modify the number of decimal places each field should have in the Dec. Places column.

For fields of format A, no decimal places are allowed. For fields of format N, 0-7 decimal places are allowed.

11 Mark at least one alphanumeric field in the `Key` column.

12 When you have finished making your entries in the User File Description Editor, press PF8.

The user file is created and the User File List screen appears.

Once a user file has been created, you cannot modify the field definitions.

Information Function

To obtain information on a user file

- Enter the command abbreviation `IN` in the command column of the User File List screen next to the user file name.

  Or:

  Issue the `INFO USERFILE` *`name`* command.

The User File Information window appears which contains the following fields:

Field	Description
File	The full name of the file (the user file prefix, the user ID and the name given by the user).
Description	You can enter or modify a description of the file here.
Creation Date/Time	Date and time at which the file was created.

Field	Description
Status	Status of the file as follows: `IN USE` Field definitions (and possibly data) exist for this file `DATA DEL` Field definitions exist. Data has been cleared `FILE DEL` File has been deleted logically but can still be retrieved ******** Deletion currently in process.
Record Count	Number of records contained in the file.
Expiration Date	Date after which the file will be automatically deleted. The user file expire period is determined by the Super Natural administrator.
Field Name	Column showing the names of the fields contained in the user file. The field name may differ from the field heading defined for display.
Format/Length	Column showing the format and length of the fields contained in the user file. A indicates alphanumeric fields, N, numeric fields.
Key	Column showing which fields are defined as key fields in the user file. Key fields are indicated by the entry DE.

Deleting User Files

When you delete a user file, you have two options:

- Delete the data and the file description

  Or:

- Delete the data only (the file description remains)

You can delete a user file description and/or data online, in Batch mode or so that the user file is retrievable.

To delete a user file

1 Enter the command abbreviation `DE` in the command column of the User File List screen next to the user file name:

  Or:

  Issue the `DELETE USERFILE` *`name`* command.

  The Delete User File window appears:

```
11:54                      ***** Super Natural *****                1993-05-24
                              - User File List -                        SN2400
                                                                            ↩

Cmd  Name                 Descrip +-------------Delete User File-------------+
     *___________________          ! File: TEST                               ↩
!
 de  TEST                  _______ !                                          ↩
!
 __                        _______ !    Delete All (Data and Definition)      ↩
!
 __                        _______ ! _  Retrievable                           ↩
!
 __                        _______ ! _  On-line                               ↩
!
 __                        _______ ! _  Batch                                 ↩
!
 __                        _______ !                                          ↩
!
 __                       _______ !    Delete Data (File Definition Remains) !
 __                        _______ ! _  Retrievable                           ↩
!
 __                        _______ ! _  On-line                               ↩
!
 __                        _______ ! _  Batch                                 ↩
!
 __                        _______ !                                          ↩
!
 __                       _______ +-----------------------------------------+
```

2 Mark the appropriate field.

3 Press Enter.

If you decide to delete online or in Batch mode, a Confirmation window appears displaying the number of records contained in the file. It is more efficient to delete large files in batch mode rather than online.

If you decide on retrievable delete, the user file description and/or data is not deleted immediately. You can retrieve the user file description and/or data at any time until deletion by a system routine set up by the administrator. The file remains on the User File List screen until this time and displays the description file *del*. For further information on the system routines at your site, ask your Super Natural administrator.

Retrieving User Files

To retrieve a user file

- Enter the command abbreviation `RE` in the command column of the User File List screen next to the user file name.

  Or:

  Issue the `RETRIEVE USERFILE` *`name`* command.

Note: You cannot retrieve a user file if the Super Natural administrator has deleted the file and/or its data or if the file expiration date has been reached.

Creating User Files Using Destination USER FILE

When you create a user file using the transaction mode Destination USER FILE, the layout and data of an existing file or files as determined using a reporting transaction are copied to the user file.

To create a user file using Report Destination USER FILE

1. Issue the `ADD TRANSACTION` *`name`* command.

   The Add Transaction window appears.
2. Enter the name of the file from which you want to copy layout and data.
3. Set the reporting mode Destination to USER FILE.

   For further information, see ***Using Reporting Transactions*** and ***Defining Transaction Modes for Reporting***.
4. Press Enter.

   The Destination User File window appears:

```
16:42                      ***** Super Natural *****                08.Jan.1993
SN1110                       - Transaction List -                        Friday
                                                                            ↩

Cmd  Name    +---------------------Destination User File---------------------+
     UF_____ !                                                               ↩
!
 __          ! Userfile name .. UF_________________                          ↩
!
 __          ! Description                                                   ↩
!
 __         !   CREATED BY: UF (08.Jan.1993 16:43)_________________________ !
 __          !                                                              ↩
!
 __        +-----------------------------------------------------------------+
```

5 Type a name for the file you are creating in the `User File Name` field.

File names must begin with a letter or a special non-blank character and are limited to 20 characters.

A default description is entered in the Description field which lists the transaction used to create the file, creation time and date.

6 Modify the description if you wish.

7 Press Enter.

The Worksheet appears:

```
16:45                        ***** Super Natural *****                 08.Jan.1993
SN3011                             - Worksheet -                            Friday
                                                                                ↩

Ref DB    Field Name                          Seq  S/C  Key  Func Def  Info Del
AQ        ___________________________________  ___  ___  __   __   __   __   __
AR        ___________________________________  ___  ___  __   __   __   __   __
AS        ___________________________________  ___  ___  __   __   __   __   __
AT        ___________________________________  ___  ___  __   __   __   __   __
AU        ___________________________________  ___  ___  __   __   __   __   __
AV        ___________________________________  ___  ___  __   __   __   __   __
AW        ___________________________________  ___  ___  __   __   __   __   __
AX        ___________________________________  ___  ___  __   __   __   __   __
AY        ___________________________________  ___  ___  __   __   __   __   __
AZ        ___________________________________  ___  ___  __   __   __   __   __
BA        ___________________________________  ___  ___  __   __   __   __   __
BB        ___________________________________  ___  ___  __   __   __   __   __
BC        ___________________________________  ___  ___  __   __   __   __   __
BD        ___________________________________  ___  ___  __   __   __   __   __
                                                                                ↩

                                                                                ↩

Enter "*" in Fieldname column to select fields or enter NEXT                    ↩

Command ===>                                                                    ↩

Enter-PF1---PF2---PF3---PF4---PF5---PF6---PF7---PF8---PF9---PF10--PF11--PF12---
      Help  Next  Exit        Incl  Flip  -     +           Sel   Run   Canc ↩
```

The Worksheet has an extra column named `Key`.

8 Make your entries in the Worksheet noting the restrictions described in the following section Using the Worksheet with Report Destination USER FILE.

9 Finish adding the transaction in the normal way.

10 Run the transaction.

When you save or run the transaction, the data you have selected for the report and the fields marked for display are used to create the user file.

Note: Records selected for transfer which contain multiple value fields or a field contained in a periodic group for transfer to a user file, are flattened. This means that for each occurrence, a separate record is written to the user file. For further information on flattening, see ***Transaction Options*** in *Adjusting a User Profile*.

Using the Worksheet with Report Destination USER FILE

When you are using report Destination USER FILE, the Worksheet has an extra column named Key and certain restrictions must be observed.

The Key Column

You must mark at least one alphanumeric field as a key field in the Key column. Key fields must also be marked with a number in the Sequence column.

Control Breaks

Report Level DETAIL

If you are using the transaction mode Report Level DETAIL, only a sort occurs at control breaks and you cannot use the system functions.

Report Level SUMMARY

If you are using the transaction mode Report Level SUMMARY, you can define one control break only.

If you define no control breaks, only the Grand Total is written to the user file - one record!

If you define more than one control break, the break with the highest number is taken and the others are used as sort levels.

You can only define one system function for each field. If you define more than one system function, the first found in the following list is performed:

- Count (Cnt)
- Total (Tot)
- Sum (Sum)
- Average (Avg)
- Maximum (Max)
- Minimum (Min)
- Null Count (NCnt) null values ignored
- Null Average (NAvg) null values ignored
- Null Minimum (NMin) null values ignored

Note: Null values are zero for numeric fields and blank for alphanumeric fields.

If you define no system function for a field but the field is marked in the Sequence column, the old value is taken.

Fields

You can only use fields of alphanumeric and numeric format. You cannot use system variables.

Field Length

The field length defined in the Define Field Output window is transferred to the user file. You can change the field length if you wish.

There are no other restrictions on how you create the transaction.

Transactions with Report Destination USER FILE

When you create a user file by sending a report to destination USER FILE, the transaction is stored in your private library. You can execute the transaction again or copy it directly from the Transaction List screen or modify the transaction and run it again. It is important to know what happens to the existing user file and any transactions which perform data maintenance functions on it in each case.

Executing Transactions with Report Destination USER FILE

If you execute a transaction with destination USER FILE, the existing user file and data are retained and additional data is written to the file. Any modifications made to the data in the existing user file using data maintenance transactions are retained. The corresponding `ADD`, `UPDATE` and `DELETE` transactions can still be executed. If you used dynamic input fields for data selection, you can also write new data to your file. You are asked to enter the selection criteria value during transaction execution. You can still use the transactions you have created which use the user file.

Modifying and Running Transactions with Report Destination USER FILE

If you use the `Modify Transaction` function and run the transaction again, the existing user file is deleted and a new file is created. Any modifications made to the data in the existing user file using data maintenance transactions are lost. The `ADD`, `UPDATE` and `DELETE` transactions remain. The transactions which use the user file remain.

If you have not modified the layout of the user file (selected different fields) and you try to run the corresponding `ADD`, `UPDATE` and `DELETE` transactions again, a warning message is issued, since the file for which they were created no longer exists. However, you can still run the transactions. You can still use the transactions you have created which use the user file.

If you have modified the layout of the file (selected different fields), an error message is issued if you try to run the corresponding `ADD`, `UPDATE` and `DELETE` transactions again. An error message is issued if you try to use the transactions you have created which use the user file.

Copying Transactions with Report Destination USER FILE

If you use the `Copy Transaction` function, the destination of the new transaction is changed to the value set in your User Profile. This is because there cannot be more than one transaction which adds *the same* user file.

Note: You cannot copy a transaction with the transaction mode Report Destination USER FILE into a common library.

20 Working with Data Maintenance Transactions

- What are Data Maintenance Transactions? 316
- Listing Transactions 316
- Adding Data Maintenance Transactions 317
- Adding Data 320
- Updating Data 324
- Deleting Data 327

This section describes how to perform the data maintenance functions available in Super Natural.

This section covers the following topics:

- **What are Data Maintenance Transactions?**
- **Listing Transactions**
- **Adding Data Maintenance Transactions**
- **Adding Data**
- **Updating Data**
- **Deleting Data**

What are Data Maintenance Transactions?

Data maintenance transactions are transactions which you can use to perform the data maintenance functions `Add`, `Update` and `Delete`. The type of data maintenance function you perform depends on the setting of your data maintenance mode Report Type.

You cannot use data maintenance transactions to modify field definitions or add new fields.

Data maintenance transactions are intended for use with your user files only. Do not perform data maintenance functions on database files without asking your Super Natural administrator.

The Super Natural administrator decides whether you may perform data maintenance, on which files and at which level.

Note: Data maintenance transactions can use primary and secondary files, but not lookup files.

If you set the transaction mode Logging to Y, you can write a report containing the data that has been processed in a data maintenance transaction to a printer, the Natural program editor. For further information, see *Defining Transaction Modes for Data Maintenance*.

Listing Transactions

To obtain a list of transactions

- Select the object *Transactions* from the Menu.

  Or:

  Issue the `TRANSACTION` command.

The List Transactions screen appears.

The Transaction List screen functions in the same way as all object list screens in Super Natural. For general information on how to use object list screens, see ***Object List Screens*** in *Starting Up*.

The List Transactions screen lists both reporting and data maintenance transactions.

Adding Data Maintenance Transactions

To add a data maintenance transaction

1 Enter a new transaction name in the `Name` column of the List Transactions screen in the input field next to the `Add` field.

Or:

Issue the `ADD TRANSACTION` *`name`* command.

The Add Transaction window appears.

Note: You can use the `CHECKLIST` function and the `NEXT` function to help you add and modify data maintenance transactions. For further information, see ***Using Super Natural***.

```
17:24                      ***** Super Natural *****                08.Jan.1998
SN1110                       - Transaction List -                        Friday
                                                                            ↩

Cmd  Name     Descript +-------------------Add Transaction--------------------+
     DATMAN_           !                                                      ↩
!
 __           ________ ! Transaction ID .... DATMAN_                          ↩
!
 __          ________ ! Description ....... ______________________________   ↩
!
 __           ________ !                     ______________________________   ↩
!
 __           ________ !                                                      ↩
!
 __          ________ ! File name ......... ________________________________ !
 __           ________ !                                                      ↩
!
 __           ________ ! Modify modes ...... _                                ↩
!
 __           ________ ! Data maintenance .. N (Y/N)                          ↩
!
 __           ________ !                                                      ↩
!
 __          ________ +-------------------------------------------------------+
```

2 Type a new transaction name in the `Transaction ID` field if no name is present.

3 Modify or delete the transaction description if you wish.

4 If you know the name of the file on which you want to perform data maintenance, enter it in the `Enter File Name` field.

The file you choose here is called your primary file.

5 If you don't know the name of the file you want to use, enter an asterisk (`*`) and the File Selection List window appears.

6 Mark the `Modify Modes` field to invoke the Modify Data Maintenance Modes window.

You can use the Modify Data Maintenance Modes window to modify the default modes for the current transaction only. The modes govern the basic conditions under which the transaction runs. For further information on data maintenance modes, see ***Defining Transaction Modes for Data Maintenance***.

If you don't mark the `Modify Modes` field, you continue to add the transaction using your default modes.

7 Enter `Y` (Yes) in the `Data Maintenance` field, to add a data maintenance transaction.

8 Press Enter.

```
17:30                      ***** Super Natural *****                08.Jan.1998
SN1110                       - Transaction List -                        Friday
                                                                            ↩

Cmd  Name    Descript + +----------------File Selection List-----------------+
     *______           ! !     File Name                          Access  Info !
 __  CONNECT  Report T ! !  _  UF-SBE-EMPLOYEE-DATA                F      _  ↩
!
 __  CONTROL  control  ! !  _  UF-SBE-NEW                          F      _  ↩
!
 __  DATACH   (92-11-1 ! !  _  UF-SBE-SUMMARY                      F      _  ↩
!
 __  DATACH2  (92-11-1 ! !  _  UF-SBE-USER-FILE-RECORDS            F      _  ↩
!
 __  DATACH3  Destinat ! !  _  UF-SBE-USERFILEV                    F      _  ↩
!
 __  DATA2    data mai ! !  _  UF-SBE-USERFILE1                    F      _  ↩
!
 __  DATA3    data mai ! !  _  UF-SBE-YACHT                        F      _  ↩
!
 __  DATA4    data mai ! !  _  FINANCE                             D      _  ↩
!
 __  DATA5    data mai ! !  _  GB-PERSONNEL                        D      _  ↩
!
 __  DATA6    data mai + !  _  KEDB2                               D      _  ↩
!
 __  DDM1     SAG ch pri !  _  KEFINANCE                           D      _  ↩
!
 __  DDM2     SAG compan !  _  KEPERS                              D      _  ↩
!
Add  datman_            !  _  MITARBEITER                         D      _  ↩
!
                        !                                                    ↩
!
Cmd(s): Modify, Execute, +More:   +-----------------------------------------+
```

If you have marked the `File Name` field with an asterisk (`*`), the File Selection List window appears as in the following example:

The File Selection List window only displays the files you can use for the transaction type specified. For example, if transaction type DELETE is specified, only the files with access codes `D` or `F` are presented for selection.
The file access codes in the Access column indicate your access level to each file as follows:

File Access Code	Description
U	Update (includes read). You can update existing records to this file.
A	Add (includes update). You can add new records to this file.
D	Delete (includes add). You can delete records in this file.
*	This file is being deleted. Access is not possible.
S	Superfile. For further information on superfiles, see *Defining Files*.
F	User file. All data maintenance functions are available (read, add, update and delete). For further information on user files, see *Working with User Files*.

9 Choose your primary file.

10 Mark the Information column to obtain an extended file description from the data dictionary Predict. This feature is only available at sites where Predict is installed.

No dictionary information is available for user files.

11 Press Enter.

What happens now is dependent on the Transaction Type specified. The four different Transaction Types for data maintenance are described in the following sections.

Adding Data

To add data

1 Add a data maintenance transaction of Transaction Type `ADD`.

The following version of the Worksheet appears:

```
17:33                      ***** Super Natural *****                08.Jan.1998
SN3011                           - Worksheet -                          Friday
                                                                            ↩

Ref DB    Field Name                          Seq   Opt  Func Def  Info Del   ↩

BB        ________________________________    ___   ___   __   __   __   __   ↩

BC        ________________________________    ___   ___   __   __   __   __   ↩

BD        ________________________________    ___   ___   __   __   __   __   ↩

BE        ________________________________    ___   ___   __   __   __   __   ↩

BF        ________________________________    ___   ___   __   __   __   __   ↩

BG        ________________________________    ___   ___   __   __   __   __   ↩

BH        ________________________________    ___   ___   __   __   __   __   ↩

BI        ________________________________    ___   ___   __   __   __   __   ↩

BJ        ________________________________    ___   ___   __   __   __   __   ↩

BK        ________________________________    ___   ___   __   __   __   __   ↩

BL        ________________________________    ___   ___   __   __   __   __   ↩

BM        ________________________________    ___   ___   __   __   __   __   ↩

BN        ________________________________    ___   ___   __   __   __   __   ↩

BO        ________________________________    ___   ___   __   __   __   __   ↩
                                                                            ↩
                                                                            ↩
Enter "*" in Fieldname column to select fields or enter NEXT                ↩

Command ===>                                                                ↩

Enter-PF1---PF2---PF3---PF4---PF5---PF6---PF7---PF8---PF9---PF10--PF11--PF12---
      Help  Next  Exit        Incl  Flip  -     +           Sel   Run   Canc ↩
```

The Worksheet contains the following columns specific to Report Types `ADD`, `UPDATE SINGLE` and `UPDATE MULTIPLE`:

2 In the Sequence column number the fields to which you want to add data.

3 In the Option column enter one of the following codes for each field marked in the `Selection` column:

Code	Description
R	Indicates a required field. You must supply a value for a required field.
C	Indicates that the contents you add to this field will be copied to the next record. (Transaction Type `ADD` only)
D	Indicates that the field will be displayed for information only, you may not update it. If you leave this column blank, you can choose whether you want to update the field when it is displayed. (Transaction Types `UPDATE SINGLE` and `UPDATE MULTIPLE`) or whether you want to add a value to it (Transaction Type `ADD`).

The other columns function as described in the section The Worksheet earlier in this documentation.

When you have finished making entries on the Worksheet, you can specify logical conditions, calculation or file linking if you wish. You cannot specify selection criteria.

4 Issue the `RUN` command.

The fields you have chosen in the `Sequence` column of the Worksheet are displayed. You can now supply your own values.

Before you supply your own value, the fields are filled with map filling characters . Map filling characters allow you to distinguish between alphanumeric and numeric fields. They also indicate field length. You can define which characters you want to use as map filling characters by changing your transaction option Map Filling Character. For further information, see ***Adjusting a User Profile.*** The recommended characters are the underscore (_) for alphanumeric and the full stop (.) for numeric fields.

When you add data, the occurrences of multiple-value fields and periodic groups are presented in separate records. This is called flattening records. For further information on flattening, see ***Transaction Options*** in *Adjusting a User Profile*.

5 To add data, type in a value (overtype the map filling characters).

6 Press Enter or PF3.

If you have assigned a value to a field in the Calculation Editor, the value you assigned does not appear but overrides any entries you make for the field here.

The following is an example of the output for an `ADD` transaction:

```
17:39:21                                                          1998-01-08
IDATMAN                                                              0     ↩
                                                                           ↩
                                                                           ↩
TITLE ......................... ____________________                      ↩
SURNAME ....................... ____________________                      ↩
FIRST-NAME-1 .................. ____________________                      ↩
                                                                           ↩
                                                                           ↩
                                                                           ↩
                                                                           ↩
                                                                           ↩
                                                                           ↩
                                                                           ↩
                                                                           ↩
                                                                           ↩
                                                                           ↩
                                                                           ↩
                                                                           ↩
                                                                           ↩
Enter-PF1---PF2---PF3---PF4---PF5---PF6---PF7---PF8---PF9---PF10--PF11--PF12---
                  Exit        Add   Flip                                Canc ↩
```

Updating Data

You can use two transaction types to update data: `UPDATE SINGLE` and `UPDATE MULTIPLE`.

When you update data, the occurrences of multiple-value fields and periodic groups are presented in separate records. This is called flattening records. For further information on flattening, see ***Transaction Options*** in *Adjusting a User Profile*.

Note: You cannot update subfields (redefined database fields defined in the Define User Field window).

Displaying Single Records

To update data displaying records singly

1. Add a data maintenance transaction of Transaction Type `UPDATE SINGLE`.

   The version of the Worksheet specific to Report Types `ADD`, `UPDATE SINGLE` and `UPDATE MULTIPLE` appears. This version of the Worksheet is described in the section *Adding Data*.
2. Make your entries on the Worksheet.
3. Specify selection criteria.
4. Specify logical conditions or calculation, file linking and lookup if you wish.
5. Issue the `RUN` command.

   The records found are displayed consecutively. The fields for each record are displayed vertically and may cover more than one screen.
6. To update a record, overtype the current entries.
7. To display the next record, press Enter.

   The following is an example of the output for an `UPDATE SINGLE` transaction:

```
17:46:59  SURNAME                                                  1998-01-08
IDATMAN2                                                              0     ↩
                                                                            ↩
                                                                            ↩
SURNAME ........................ HOLLY                                     ↩
PERSON-ID ...................... 0.......                                  ↩
SEX ............................                                           ↩
BIRTH-DATE ..................... 0                                         ↩
                                                                            ↩
                                                                            ↩
                                                                            ↩
                                                                            ↩
                                                                            ↩
                                                                            ↩
                                                                            ↩
                                                                            ↩
                                                                            ↩
                                                                            ↩
                                                                            ↩
                                                                            ↩
Enter-PF1---PF2---PF3---PF4---PF5---PF6---PF7---PF8---PF9---PF10--PF11--PF12---
                  Exit        Updt  Flip        +                       Canc ↩
```

Displaying Multiple Records

To update data displaying multiple records

1 Add a data maintenance transaction of Transaction Type `UPDATE MULTIPLE`.

This transaction type is only available for Adabas files.

You cannot number multiple-value fields and periodic group fields in the `Sequence` column of the Worksheet.

The main difference between this transaction type and `UPDATE SINGLE` is the way the records are presented for updating.

The following is an example of output for an `UPDATE MULTIPLE` transaction:

```
18:21:47  YACHT-ID                                                1998-09-07
IMUSTER0                                                              0

  YACHT-ID  YACHT-NAME                     Y ID-CH-BA ID-S-OWNE DID-DESC
_ 1         ANTIGONE_______________________ A 21______ 0........ ________
_ 2         EDELWEISS______________________ A 21______ 0........ ________
_ 3         HELENA_________________________ A 21______ 0........ ________
_ 4         MEDEA__________________________ A 21______ 0........ ________
_ 5         ATLANTIC OCEAN_________________ A 24______ 0........ ________
_ 6         SYSTEM FUNCTION________________ A 21______ 0........ ________
_ 7         ATHENE_________________________ A 24______ 0........ ________
_ 8         PANDORA________________________ A 21______ 0........ ________
_ 9         APHRODITE______________________ A 21______ 0........ ________
_ 10        ANDROMEDA______________________ A 21______ 0........ ________
_ 11        CIRCE__________________________ A 21______ 0........ ________
_ 12        PENTHESILEA____________________ A 24______ 0........ ________
_ 13        HAITI__________________________ A 25______ 0........ ________
_ 14        ATLANTIS_______________________ A 21______ 0........ ________
_ 15        BREAKDANCE_____________________ A 24______ 0........ ________
_ 16        JAMAIKA________________________ A 25______ 0........ ________


Enter-PF1---PF2---PF3---PF4---PF5---PF6---PF7---PF8---PF9---PF10--PF11--PF12---
                 Exit        Updt  Flip        +                      Cancel
```

If the line length of this horizontal display is not sufficient, you can mark records to be updated in the first column to invoke vertical display as in transaction type `UPDATE SINGLE`.

2 To update records, overtype the current entries.

3 Press PF5 to save your changes.

The records are updated and the next page is displayed.

Deleting Data

Deleting Records Singly

To delete data

1 Add a data maintenance transaction of Transaction Type `DELETE`.

The Worksheet appears as described in the section *Worksheet*.

2 Continue to add a transaction which selects all the records you want to delete.

The fields you select to be displayed allow you to review each record before deletion.

3 Specify logical conditions, calculation or file linking if you wish.

4 Issue the `RUN` command.

Each record is presented separately for review.

5 To continue to the next record without deleting, press Enter or PF8 (page one page forwards).

6 To delete a record, press PF3 (delete).

The entire record is deleted, not just the fields selected for display. Only the records displayed are deleted.

Deleting the Contents of a User File

You can delete all the records in a user file using the `Delete User File Data Only` function described in the section *User Files*.

21 Command List

- A 330
- B 332
- C 334
- D 335
- E 336
- F 337
- G 338
- H 338
- I 339
- J 339
- K 339
- L 340
- M 340
- N 341
- O 342
- P 342
- Q 343
- R 343
- S 344
- T 347
- U 348
- V 348
- W 348
- X 349
- Y 349
- Z 349
- Special Characters 349

This section lists the following:

- The commands known to Super Natural
- The shortest possible abbreviation of each command (underlined)
- A description of each command.
- Where to issue each command.

Super Natural commands are language-dependent!

This appendix is available online when you mark a command in the Command List window with the cursor position and press PF1.

This section covers the following topics:

[A | B | C | D | E | F | G | H | I | J | K | L | M | N | O | P | Q | R | S | T | U | V | W | X | Y | Z | Special Characters]

A

A BACKWARD

Pages one page backwards in section A of the Layout Editor.

- Issue from the Layout Editor.

A BOTTOM

Pages to last page in section A of the Layout Editor.

- Issue from the Layout Editor.

A DELIMITER

Invokes delimiter information in section A of the Layout Editor.

- Issue from the Layout Editor.

A FORWARD

Pages one page forwards.

- Issue from the Layout Editor.

A LEFT

Displays data to the left of your present screen contents if you have more columns in a report than you can see at one time.

- Issue from the Layout Editor.

A LINE line-number

Pages to the line number specified in section A of the Layout Editor.

- Issue from the Layout Editor.

A RIGHT

Displays data to the right of your present screen contents if you have more columns in a report than you can see at one time.

- Issue from the Layout Editor.

A SCAN field-name

Pages to the field named (only if section A is displaying transaction fields)

- Issue from the Layout Editor.

A TOP

Pages to first page.

- Issue from the Layout Editor.

A TRANSACTION

Invokes transaction field information in section A of the Layout Editor.

- Issue from the Layout Editor.

ADD object-type object-name

Invokes the appropriate add object window with the new object name already entered.

Use with the following object types:

- Transaction
- Application program
- User file
- Issue from the Menu and list object screens.

Note: If the list object screen for the type of object you want to add is displayed, you need not specify object type.

ALL

Selects all the fields contained in the file(s) you are using and enters them in the Fieldname column of the Worksheet.

- Issue from the Worksheet.

APPLICATION

Invokes the List Application screen.

- Issue from the Menu and list object screens.

ARRAY

Invokes the Array Editing window from the command column in the Layout Field List screen.

- Issue from Display Layout Element screen.

B

B BACKWARD

Pages one page backwards in section B of the Layout Editor.

- Issue from the Layout Editor.

B BOTTOM

Pages to last page.

- Issue from the Layout Editor in section B of the Layout Editor.

B DELIMITER

Invokes delimiter information in section B of the Layout Editor.

- Issue from the Layout Editor.

B FORWARD

Pages one page forwards in section B of the Layout Editor.

- Issue from the Layout Editor.

B LEFT

Displays data to the left of your present screen contents in section B of the Layout Editor if you have more columns in a report than you can see at one time.

- Issue from the Layout Editor.

B LINE line-number

Pages to the line number specified in section B of the Layout Editor.

- Issue from the Layout Editor.

B RIGHT

Displays data to the right of your present screen contents in section B of the Layout Editor if you have more columns in a report than you can see at one time.

- Issue from the Layout Editor.

B SCAN field-name

Pages to the field named (only if section B is displaying transaction fields)

- Issue from the Layout Editor.

B TOP

Pages to first page in section B of the Layout Editor.

- Issue from the Layout Editor.

B TRANSACTION

Invokes transaction field information in section B of the Layout Editor.

- Issue from the Layout Editor.

BACKWARD (-)

Pages one page backwards.

- Issue when shown in the PF key lines.

BOTTOM (++)

Pages to last page.

- Issue when shown in the PF key lines.

C

CALCULATION

Invokes the Calculation Editor.

- Issue from within a transaction.

CANCEL

The `CANCEL` command interrupts the current function without saving. If a window is displayed, the `CANCEL` command closes it and if a screen is displayed, the `CANCEL` command invokes the previous screen.

Note: The Confirmation window does not appear and entries made since you last saved or pressed Enter are cancelled!

- Issue at any point in Super Natural.

CHECK

Checks your entries in the Super Natural editors and pinpoints errors. You can correct the error, ignore it and continue working using `CANCEL` or leave the editor using `EXIT`.

- Issue when working with the Selection, SQL SELECT, Calculation and Logical Conditions Editors.

CHECKLIST (CHLST)

Invokes the Checklist window.

- Issue from within a transaction (not in Natural Report Manager).

COMMANDS

Invokes the Command List window.

- Issue at any point in Super Natural.

CONTINUE

Invokes a window which tells you what you can do next.

- Issue from the Selection, Calculation and Logical Conditions Editors.

COPY object-type object-name [target-name] [target-library]

Copies the named object within a library or to another library. Use with the following object types:

- Transaction
- Prototype program
- Application program
- Issue from the Menu, Worksheet and list object screens.

Note: If the list object screen for the type of object you want to copy is displayed, you need not specify object type.

COUNT

Counts the number of records found by the present transaction but does not display the resulting data.

- Issue from within a transaction.

Note: The COUNT command disregards lookup files.

D

DELETE

Deletes edit lines in all editors (not the Layout Editor).

- Issue from any Super Natural editor except the Layout Editor.

DELETE object-type object-name

Deletes the named object. Use with the following object types:

- Transaction
- Prototype program
- Application program
- User file
- Issue from the Menu, Worksheet and list object screens.

Note: If the list object screen for the type of object you want to delete is displayed, you need not specify object type.

DELETE ALL

Deletes all elements in the layout you are working on.

- Issue from Natural Report Manager.

DELETE element-name

Deletes the named element.

- Issue from Natural Report Manager.

DISPLAY ALL

Displays all elements in the layout you are working on.

- Issue from Natural Report Manager.

DISPLAY element-name

Invokes the Display Layout Element screen displaying the element specified.

- Issue from Natural Report Manager.

E

EDIT editor-direct-command

The command `EDIT` must precede every editor direct command (not in the Layout Editor).

- Issue from any Super Natural editor except the Layout Editor.

EDIT ALL

Invokes the Layout Editor with all elements in the editor area.

- Issue from Natural Report Manager.

EDIT element-name

Invokes the Layout Editor with the named element in the editor area.

- Issue from Natural Report Manager.

EXECUTE object-type object-name

Executes the object named. Use with the following object types:

- Transaction
- Application program

If you want to run an existing transaction without modifying it, it is most efficient to use the `EXECUTE` command from the List Transactions screen. This is because when you issue the `EXECUTE`

command, Super Natural uses the transaction as it was when the transaction was last run or saved. When you run a transaction using the `RUN` command, Super Natural completely recreates the transaction. You cannot execute a transaction you have left using the `KEEP` command.

Note: for the Administrator: When you execute a transaction, the Natural program generated last time the transaction was run or saved is executed. The program is not recataloged.

- Issue from the Menu, Worksheet and list object screens.

Note: If the list object screen for the type of object you want to execute is displayed, you need not specify object type.

EXIT

Ends the function you are performing and saves your modifications.

If you leave a transaction using the `EXIT` command, a window asks you if you want to save and exit, keep and exit, exit without keeping or saving or resume the current function.

- Issue when shown in the PF key lines.

F

FIELDS

Invokes the Field Selection List window.

- Issue from the Worksheet and the Selection, Calculation and Logical Conditions Editors.

FIELDS element-name

Invokes the Layout Field List screen for the element you are working with.

- Issue from Natural Report Manager.

FIELDS ALL

Invokes the Layout Field List screen for all the elements in the layout you are working with.

- Issue from Natural Report Manager.

FLIP

Displays the twelve PF keys not currently on view.

For example, if the keys PF1 to PF12 are displayed, the `FLIP` command displays the keys PF12 to PF24.

Whichever twelve keys are displayed, you can still use any of the other twelve keys which has a function allocated to it.

- Issue at any point in Super Natural.

Note: This command does not apply if you are using the SAA PF key format.

FORWARD (+)

Pages one page forwards.

- Issue when shown in the PF key lines.

FULL

Invokes the Layout Editor with full screen editor area.

- Issue from the Layout Editor.

G

GENERATE PROTOTYPE

Generates a prototype program from the transaction you are working on. You cannot generate a prototype program from a transaction which is not finished.

- Issue from within a transaction.

GENERATE RPC

Generates an RPC Service from the transaction you are working on. You cannot generate an RPC Service from a transaction which is not finished.

- Issue from within a transaction.

H

HELP

Invokes the Super Natural help system.

- Issue at any point in Super Natural except when already using the help system.

I

INCLUDE

Invokes the Include Files window where you can do the following:

- Change the original primary file (as long as no fields have been used or user fields defined)
- Define/change a secondary file
- Define/change a lookup file(s)
- Issue from the Worksheet.

INFO object object-name

Supplies information on named object. Use with the following object types:

- Transaction
- User file
- Issue from the Menu, Worksheet, object list screens and editors (not Layout Editor).

Note: If the list object screen for the type of object you want information on is displayed, you need not specify object type.

J

K

KEEP

Keeps any transaction even if it contains errors.

- Issue from within a transaction.

Note: for the Administrator: When you keep a transaction, the commentary lines (transaction specification) for a Natural program are generated and saved but the Natural program for the transaction itself is not generated. If you keep a transaction which has already been run or saved, the program generated by the run or save is deleted and only the commentary lines are kept.

L

LAYOUT

Invokes the Layout Editor which displays either the default layout for the current transaction or a layout you have already edited.

- Issue from within a transaction.

LEFT (<)

Displays data to the left of your present screen contents if you have more columns in a report than you can see at one time.

- Issue when shown in the PF key lines.

LINE line-number

Scrolls to the line number specified in the Layout Editor and Display Element screen.

- Issue from the Layout Editor or Display Element screen.

LOCK

Lock user exits and selection lines in the Selection Editor so that they may not be modified. You can add further selection criteria but you may not use the logical operator OR.

- Issue from the Selection Editor or from the Exit Specification screen.

LOGIC

Invokes the Logical Conditions Editor.

- Issue from within a transaction.

M

MAINTAIN

Invokes the Super Natural Maintenance Menu.

- Issue from the (Super Natural Processor) Menu.

MENU

Invokes the Menu from any point in Super Natural. Processing is interrupted and your changes are not saved.

- Issue at any point in Super Natural.

MODES

Invokes the Modify Modes for Reporting or the Modify Modes for Data Maintenance window depending on the type of transaction you are creating or modifying.

Note: The modifications you make in these windows are only valid for the current transaction. See **PROFILE**.

- Issue from within a transaction (not in Natural Report Manager).

MODIFY object-type object-name

Invokes the Modify *object* function. Use with the following object types:

- Transaction
- Prototype program
- Issue from the Menu and list object screens.

Note: If the list object screen for the type of object you want to modify is displayed, you need not specify object type.

N

NEXT

Takes you to the next step you have selected in the Checklist window. If you have selected no further function, the Checklist window appears.

- Issue from within a transaction (not in Natural Report Manager).

NOSEQUENCE

Removes all numbers from the Sequence column in the Worksheet.

- Issue from the Worksheet.

NOTEPAD

Invokes the Super Natural notepad.

- Issue at any point in Super Natural.

O

OPTIONS

Invokes the Transaction Options window. See **PROFILE**.

Note: The modifications you make in this and the following windows are only valid for the current transaction.

- Issue from within a transaction (not in Natural Report Manager).

OVERVIEW

Invokes the Layout Overview screen from the Display Layout Element screen, Layout Editor and Layout Field List screens.

- Issue from Natural Report Manager.

P

POSITION

Displays the report with the column at the cursor position on the left-hand side of the report display.

- Issue using PF9 when looking at a report which is wider than one screen.

PRINT

- Prints the information found by the Value function
- Prints the transaction and user file information found by the Information function.
- Prints a report starting at the current page. If you are using Com-plete, the Com-plete Printout Specification screen appears.

Note: If you want to print a whole report, you can also use Report Destination PRINTER.

- Issue when the relevant information is displayed.

PROFILE

Invokes the Modify Profile screen.

Note: The modifications you make in this screen are valid for all new transactions.

- Issue from the Menu and list object screens.

PROTOTYPE

Invokes the List Prototype screen.

- Issue from the Menu and list object screens.

Q

R

REFRESH

Deletes the lines in the current editor and recalls the lines which were present (if any) when the transaction was last saved.

- Issue from any Super Natural editor except the Layout Editor.

RELEASE

All fields not currently in use in a transaction are removed from the source area and are no longer available. For example, if you invoke the Field List window from an editor or the Worksheet, only the fields in use when you issued the `RELEASE` command are listed. If you are using very large files, you can use this command to avoid problems with temporary memory capacity (buffer overflow).

- Issue from within a transaction (not in Natural Report Manager).

RETRIEVE USERFILE userfile-name

Retrieves the named user file which has been deleted logically but not physically. The user file can be retrieved until the administrator or a system routine deletes it.

- Issue from the Menu and list object screens.

Note: If you are in the Userfile List screen, you need not specify object type.

RIGHT (>)

Displays data to the right of your present screen contents if you have more columns in a report than you can see at one time.

- Issue when shown in the PF key lines.

RUN

Runs a transaction you are modifying or creating. You cannot run a transaction which is not finished or still has errors in it.

- Issue from within the transaction you want to run.

Note: For the Administrator:
When you run a transaction, a Natural program is generated, cataloged and executed.

S

SAVE

If you have completed a transaction but do not want to see the results immediately, you can save it. You cannot save a transaction which still has errors in it. You can execute a transaction using the `EXECUTE` command when it has been saved.

- Issue from within the transaction you want to save.

Note: For the Administrator:
When you save a transaction, a Natural program is generated and cataloged but not executed.

SCAN field-name

Pages to the field named in the section of the Layout Editor displaying transaction fields.

- Issue from the Layout Editor.

SCAN text-string

Pages to the specified text string in the show area, display area and editor area.

- Issue from the Layout Editor.

SECTION

Invokes the Layout Editor with information sections.

- Issue from the Layout Editor.

SELECTION

Invokes the Selection Editor, PC file editor or work file editor depending on the selection mode setting.

- Issue from within a transaction.

SEQUENCE

Gives each field entered in the Fieldname column a number from 1 to 99 in the Sequence column. The first 99 fields are numbered in ascending order from the top of the Worksheet to the bottom of the last page.

- Issue from the Worksheet.

SETTINGS

Invokes the Layout Settings window.

- Issue from Natural Report Manager.

SHOW BACKWARD

Pages one page backwards in the show area of the Layout editor.

- Issue from the Layout Editor.

SHOW BOTTOM

Pages to last page of the element in show area of the Layout Editor.

- Issue from the Layout Editor.

SHOW element-name

Invokes the show area of the Layout Editor showing the element named.

- Issue from the Layout Editor.

SHOW FORWARD

Pages one page forwards in the show area of the Layout Editor.

- Issue from the Layout Editor.

SHOW LEFT

Displays data to the left of your present screen contents if you have more columns in a report than you can see at one time in the show area of the Layout Editor.

- Issue from the Layout Editor.

SHOW LINE line-number

Pages to the specified line number specified in the show area of the Layout Editor.

- Issue from the Layout Editor.

SHOW NAME group-element-name

Invokes a window which gives you the following information on the control field for the group element specified:

- Control field name
- File in which control field is contained
- Control field field type
- Issue from the Layout Editor.

SHOW RIGHT

Displays data to the right of your present screen contents if you have more columns in a report than you can see at one time in the show area of the Layout Editor.

- Issue from the Layout Editor.

SHOW SCAN text-string

Pages to the specified text string in the show area of the Layout Editor.

- Issue from the Layout Editor.

SHOW TOP

Pages to first page of the element in show area of the Layout Editor.

- Issue from the Layout Editor.

SORT

Sorts the elements in the edit area of the Layout Editor into the following order:

- Title
- Preface
- Header
- List
- Groups 1 - 10

- Footer
- Appendix
- Issue from the Layout Editor.

T

TABLES

Invokes the List DB2 Tables screen.

- Issue from the SQL Select editor.

TABULAR

Invokes the Tabular Report Specification screen when you are adding a report of report type TABLE.

- Issue from within a transaction of report type TABLE (not in Natural Report Manager).

TECH

Invokes the Technical Information window.

- Issue from any point in Super Natural.

TEST

Shows how the report data would be presented if you ran the transaction you are working on using Report Destination SCREEN, PRINTER, or EDITOR. The test report is filled with dummy data.

- Issue from the Layout Editor.

TOP (- -)

Pages to first page.

- Issue when shown in the PF key lines.

TRANSACTION

Invokes the Transaction List screen.

- Issue from the Menu, Worksheet and list object screens.

Invokes transaction field information in the section of the Layout Editor in which the cursor is positioned.

- Issue from the Layout Editor.

TYPE

Moves the Type column to the other side of the Layout Editor.

- Issue from the Layout Editor.

U

USEREXIT

Invokes the Exit Specification screen.

- Issue from within a transaction.

USERFILE

Invokes the List User File screen.

- Issue from the Menu and list object screens.

V

W

WORKSHEET

Invokes the Worksheet.

- Issue from within a transaction (not in Natural Report Manager).

X

Y

Z

Special Characters

*

Invokes the Command List window.

- Issue from any point in Super Natural or Natural Report Manager.

-

Pages one page backwards.

- Issue when shown in the PF key lines.

- -

Pages to first page.

- Issue when shown in the PF key lines.

+

Pages one page forwards.

- Issue when shown in the PF key lines.

++

Pages to last page.

- Issue when shown in the PF key lines.

<

Displays data to the left of your present screen contents if you have more columns in a report than you can see at one time.

- Issue when shown in the PF key lines.

<<

Shifts to the far left position of your present screen contents if you have more columns in a report than you can see at one time.

- Issue from the Layout Editor.

>

Displays data to the right of your present screen contents if you have more columns in a report than you can see at one time.

- Issue when shown in the PF key lines.

>>

Shifts to the far right position of your present screen contents if you have more columns in a report than you can see at one time.

- Issue from the Layout Editor.

22 System Variables

- *APPLIC-ID 352
- *APPLIC-NAME 353
- *DAT Variables 353
- *DEVICE 354
- *GROUP 354
- *HARDCOPY 354
- *INIT-ID 355
- *INIT-USER 355
- *LANGUAGE 355
- *LIBRARY-ID 357
- *OPSYS 357
- *PAGE-NUMBER 357
- *PROGRAM 357
- *TIM Variables 357
- *TPSYS 358
- *USER 358
- *USER-NAME 358

This section describes the system variables available in Super Natural.

This section covers the following topics:

- *APPLIC-ID
- *APPLIC-NAME
- *DAT Variables
- *DEVICE
- *GROUP
- *HARDCOPY
- *INIT-ID
- *INIT-USER
- *LANGUAGE
- *LIBRARY-ID
- *OPSYS
- *PAGE-NUMBER
- *PROGRAM
- *TIM Variables
- *TPSYS
- *USER
- *USER-NAME

*APPLIC-ID

Format/length: A8.

This system variable contains the ID of the library which the user is using.

*APPLIC-NAME

Format/length: A32.

If Natural Security is installed, this variable contains the name of the library which the user is using.

If Natural Security is not installed, this variable contains the name `SYSTEM`.

*DAT Variables

All *DAT variables contain the current date. The format of the date is different for each date variable, as indicated below.

Date Variable	Format/Length	Date Format
*DATD	A8	DD.MM.YY
*DAT4D	A10	DD.MM.YYYY
*DATE	A8	DD/MM/YY
*DAT4E	A10	DD/MM/YYYY
*DATG	A15	DDmonthnameYYYY (Gregorian date)
*DATI	A8	YY-MM-DD
*DAT4I	A10	YYYY-MM-DD
*DATJ	A5	YYDDD (Julian date)
*DAT4J	A7	YYYYDDD (Julian date)
*DATN	N8	YYYYMMDD
*DATU	A8	MM/DD/YY
*DAT4U	A10	MM/DD/YYYY
*DATX	D	Internal date format

* D = day, M = month, Y = year.

*DEVICE

Format/length: A8.

This system variable contains the device type/mode from which Natural has been invoked. It may contain one of the following values:

Value	Description
BATCH	batch mode
COLOR	3279 compatibility3278 (device with extended attribute support)
VIDEO	3270 screen devices
TTY	teletype or other start/stop devices
PC	PC device
BTX	BTX device

*GROUP

Format/length: A8.

This system variable is applicable under Natural Security only. It contains the ID with which the user has logged on to a protected library.

If the user is directly linked to the library, *GROUP contains the user's ID. If the user is linked to the library via a group, *GROUP contains the group ID.

If the user is logged on to an unprotected library (where no link is used), *GROUP is blank.

If Natural SECURITY is not active, *GROUP is blank.

*HARDCOPY

Format/length: A8.

This system variable contains the name of the hardcopy device which is used when the hardcopy function is used.

*INIT-ID

Format/length: A8.

This system variable contains the ID of the terminal from which Natural was invoked. The terminal ID is defined according to the conventions of the host TP system.

In batch mode, *INIT-ID contains the step name of the Natural job.

*INIT-USER

Format/length: A8.

This system variable contains the ID of the user logged on at the terminal being used. In batch mode, it contains the job name of the Natural job.

*LANGUAGE

Format/length: I1.

This system variable contains the language indicator (language code) of the language you are using. A one-character code is assigned to each language.

The following languages are assigned to the individual language codes if they are available at your site.

Code	Language
1	English
2	German
3	French
4	Spanish
5	Italian
6	Dutch
7	Turkish
8	Danish
9	Norwegian
10	Albanian
11	Portuguese

Code	Language
12	Chinese Latin (Republic of China)
13	Czech
14	Slovak
15	Finnish
16	Hungarian
17	Icelandic
18	Korean
19	Polish
20	Romanian
21	Swedish
22	Croatian
23	Catalan
24	Basque
25	Afrikaans
26	Bulgarian
27	Greek
28	Japanese (Katakana)
29	Russian
30	Serbian
31	Arabic
32	Farsi (Iran)
33	Hebrew
34	Urdu (Pakistan)
51	Hindi
52	Malayan
53	Thai
57	Chinese (People's Republic of China)
58	Chinese (Republic of China)
59	Japanese (Kanji)
60	Korean

*LIBRARY-ID

Format/length: A8.

This system variable contains the current Natural library ID (as specified by the user in the `LOGON` command).

This variable is the equivalent of the variable *APPLIC-ID.

*OPSYS

Format/length: A8.

This system variable contains the name of the operating system that is being used.

*PAGE-NUMBER

Format/length: P5.

This system variable contains the current page number of an output report.

*PROGRAM

Format/length: A8.

This system variable contains the name of the Natural program that is currently being executed.

*TIM Variables

*TIM variables contain the current time. The format of the time is different for each variable, as indicated below:

Time Variable	Format/Length	Time Format
*TIME	A10	HH:MM:SS.T
*TIMN	N7	HHMMSST
*TIMX	T	Internal time format

*TPSYS

Format/length: A8.

This system variable contains the name of the TP monitor that is being used. In batch mode, *TPSYS is blank.

*USER

Format/length: A8.

This system variable contains the user ID used in the Natural Security logon.

If Automatic Logon (profile parameter AUTO=ON) is active, the value of *USER is identical to the value of the system variable *INIT-USER.

If Natural Security is not active, the value of *USER is identical to the value of the system variable *INIT-USER.

*USER-NAME

Format/length: A32.

If Natural Security is installed, this variable contains the name of the user currently logged on to Natural.

If Natural Security is not active, the default is `SYSTEM`.

23 Edit Masks

- What are Edit Masks? 360

This appendix describes the edit masks available in Super Natural. The information has been taken from the section *General Information* in the *Natural Reference* documentation. Information not relevant to Super Natural users has been removed and other slight alterations have been made.

This section covers the following topics:

- **What are Edit Masks?**

What are Edit Masks?

Edit masks determine how fields are displayed. Using an edit mask, you can do the following when displaying fields:

- Insert blanks
- Insert characters
- Display the field with leading or trailing characters
- Display numeric fields with a sign before or after the number
- Suppress leading zeros in numeric fields

You can also use edit masks to determine how the date and time are displayed.

Abbreviating Edit Masks

You can use abbreviated notation for long edit masks. The following examples show abbreviated notation for numeric, hexadecimal, and alphanumeric edit masks:

Abbreviation	Equivalent
9(4)-9(5)	9999-99999
H(10)	HHHHHHHHHH
X(6)..X(3)	XXXXXX..XXX

You can only use this notation with the characters "9", "H", "X" and "Z" which represent significant print positions in the numeric, hexadecimal, and alphanumeric edit masks.

Blanks in Edit Masks

Blanks within an edit mask are represented by the character which corresponds to H'5F', i.e. "^" or "¬" in hexadecimal code on your keyboard.

Edit Masks for Numeric Fields

A numeric edit mask used with N, P, I, or F format fields must contain at least one "9" or "Z". If there are more 9s or Zs than the number of positions contained in the field value, the number of print positions in the edit mask is adjusted to the number of digits defined for the field value. If there are fewer 9s or Zs, the high-order digits before the decimal point and/or low-order digits after the decimal point are truncated.

Two options are available when using numeric edit masks. The first option allows the insertion of a special character as the first character in the edit mask.

Edit Mask Notation for Numeric Fields

Character	Function
9	Position to be displayed.
Z	Zero suppression for leading zeros. This is the default for numeric fields. The letter "Z" may be repeatedly specified to represent floating zero suppression. A "Z" must not be specified to the right of the decimal point. A zero value may be displayed as blanks using all "Z"s in the edit mask.
+	A floating sign is to be displayed preceding/following the number. The sign may be generated as a plus or minus depending on the value of the field.
-	A floating minus is to be displayed preceding/following the number if the value of the field is negative.
S	A sign is to be displayed to the left of the value. A plus sign is displayed for a positive value and a minus sign is displayed for a negative value. If "S" is used, it must be specified as the first character in an edit mask.
N	A minus sign is to be displayed to the left of the column if the value of the field is negative.
.	A period, if used as the first character, represents a decimal position and is significant.
H	Designates the beginning of a hexadecimal edit mask. If an "H" appears as the first position, all other character which are not "H" will be considered insertion characters.

The second option allows any number of leading characters to appear prior to the first displayable position (as indicated with the digit "9"). The first of these leading characters must not be any of the edit characters described above unless enclosed in quotes. The first of these insertion characters specified will appear in the output only if the value contains leading zeros and the edit mask is defined with Z (leading zero suppression). This character will then be displayed instead of a blank for leading zeros.

Both options permit the use of insertion and trailing characters. The symbol (^) may be used to represent a leading, inserted, or trailing blank. By enclosing significant characters (9, H, Z, X) in

apostrophes, it is possible to use any characters as leading, insertion, or trailing characters. Insignificant edit mask characters need not be enclosed in apostrophes. Within the same edit mask notation, it is possible to have groups of leading, insertion, and/or trailing character strings, some of which are bounded by apostrophes and some of which are not.

A trailing sign character can be specified for numeric edit masks by using the "+" or "-" characters as the last character in the edit mask. A "+" will produce a trailing "+" or "-" sign depending on the value of the field. A "-" will produce a trailing space or "-" sign depending on the value of the field. If a leading and trailing sign are specified in the edit mask, both will be produced.

Edit Masks for Alphanumeric Fields

An alphanumeric edit mask which is only to be used with A format fields must contain at least one "X" which represents a character to be displayed. An "H" as the first character designates a hexadecimal edit mask (see *Edit Masks for Fields in Hexadecimal Format*). A blank is represented by a (^) symbol. All other characters except parentheses are permissible including leading, trailing, and insertion characters. It is also possible to specify leading, insertion, or trailing characters enclosed within apostrophes. If the character "X", a closing parenthesis, or a quotation mark is specified as an insertion character, it must be enclosed within apostrophes.

If leading characters are used before the first displayable position X, the first of these leading characters will not be displayed. Trailing characters which immediately follow the last permissible print position will be displayed.

The number of positions to be displayed will be adjusted to the length of the edit mask if the mask is shorter than the field.

Note: An edit mask specification will override any settings for the session parameters AL, ES and ZP.

Examples of Edit Mask for Alphanumeric Fields

The following table shows alphanumeric edit masks for a field that is defined with format/length A4 and contains the value "BLUE":

Edit Mask	Output
X.X.X.X	B.L.U.E
X^X^X^X	B L U E
X--X--X	B--L--U
X-X-X-X-X-X	B-L-U-E-
X' 'X' 'X' 'X	B L U E
XX....XXX	BL....UE
1234XXXX	234BLUE

Edit Masks for Fields in Hexadecimal Format

If the character "H" is specified as the first character in an edit mask, the content of an alphanumeric or numeric field will be displayed in hexadecimal format. Each "H" represents two print positions that will occur for each byte in the source field. Characters other than "H" serve as insertion or trailing characters in the mask. The number of positions to be displayed will be adjusted to the length of the edit mask if the mask is shorter than the field. The length of the edit mask will be adjusted to the length of the field if the field length is shorter than the edit mask.

Insertion or trailing characters may be optionally specified bounded by apostrophes.

All fields displayed with a hexadecimal edit mask are treated as alphanumeric. Therefore, if the edit mask is shorter than the field to be edited, numeric or alphanumeric positions will be displayed from left to right disregarding any decimal point positions.

Examples of Edit Masks for Fields in Hexadecimal Format

The table below lists the hexadecimal edit masks with results obtained from the original fields and values shown above each column. All numeric values ("-10", "+10", "01") to which edit masks have been applied originated in fields defined with N2 format. The alphanumeric value "AB" originated from a field defined with A2 format:

Edit Mask	Output for: AB	Output for: -10	Output for: +10	Output for: 01
HH	C1C2	F1D0	F1F0	F0F1
H¬H	C1 C2	F1 D0	F1 F0	F0 F1
HH¬H	C1C2	F1D0	F1F0	F0F1
H-H	C1-C2	F1-D0	F1-F0	F0-F1
H	C1	F1	F1	F0

Edit Mask Characters for Fields in Date and Time Format

You can use the characters for fields defined with Date format in edit masks for fields defined with Time format. You cannot use the characters for fields defined with Time format in edit masks for fields defined with Date format.

Edit Mask Characters for Fields in Date Format

The following characters may be used in edit masks for fields defined with format D (date). You can also use them for fields defined with T (time) format.

Character	Usage
DD	Day.
ZD	Day with zero suppression.
MM	Month.
ZM	Month with zero suppression.
YYYY	Year (4 digits).
YY	Year (2 digits).If used for input, 19 is concatenated before the input value.
Y	Year (1 digit).May not be used for input.
WW	Number of Week.
ZW	Number of Week with zero suppression.
JJJ	Julian day.
ZZJ	Julian day with zero suppression.
N...N	Name of Day (language dependent).
N(n)	Name of Day using length "n".
L...L	Name of Month (language dependent).
L(n)	Name of Month using length "n".
R	Year in Roman numerals (maximum 13 digits).

If MM, YY or YYYY are not specified within an input edit mask, the current system date is used to provide values for month and year.

If a week is displayed which belongs to the previous or the next year, the display for year is modified accordingly.

Edit Mask Characters for Fields in Time Format Only

The following edit mask characters may only be used for fields defined with T (time) format.

Character	Usage
T	Tenth of a second.
SS	Second.
ZS	Second with zero suppression.
II	Minute.
ZI	Minute with zero suppression.
HH	Hour.
ZH	Hour with zero suppression.
AP	AM/PM element.

Examples of Edit Masks for Fields in Date Format

Edit Mask	Output	Description
No Edit Mask	87-07-11	Date Internal
R	MCMLXXXVII	Roman
MM/DD/YY	07/11/87	American
YYJJJ	87192	Julian
ZD.L(10)YY	11.July87	Gregorian
N(9)' 'ZW.'WEEK 'YY	Saturday 28.WEEK 87	
ZZJ'.DAY 'YYYY	192.DAY 1987	

Examples of Edit Masks for Fields in Time Format

Edit Mask	Output	Description
No Edit Mask	10:27:50	Time Internal
HH:II:SS:T	10:27:50.8	
HH:II:SS' 'AP	10:27:50 AM	
HH	10	